Energy Management

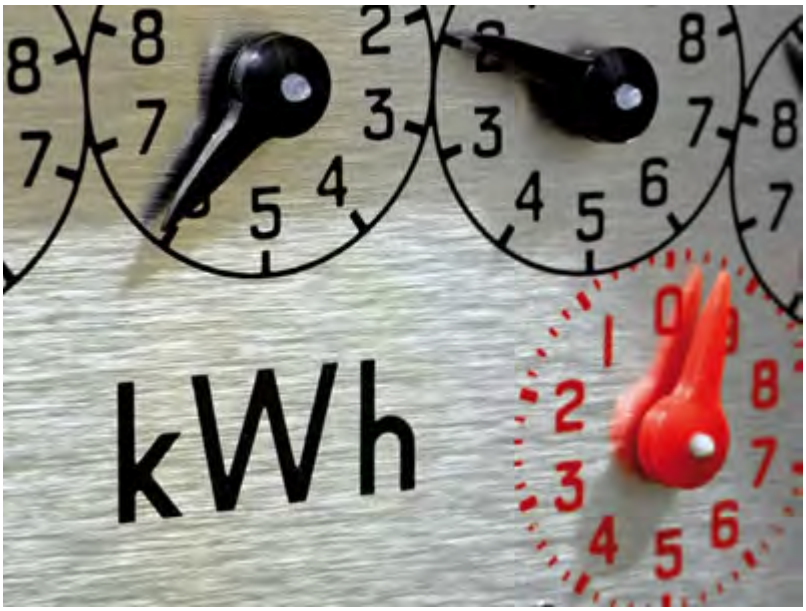

Experiment Objectives

Explore the response of linear, time-invariant complex loads in AC and three-phase power systems especially in terms of theory and to demonstrate the relationships between electrical current and voltage. With the aid of phasor diagrams that depict dynamic, harmonic variables using complex numbers, we avoid the less accessible visual representations in the time domain and thus reduce the mathematical complexity.

Demonstrate how reactive power causes additional stress to the power grid of the power supply utilities. Capacitors are able to compensate for lagging reactive power needed in AC and three-phase motors. That way lower currents can flow in the feed lines while achieving the same active power transmission. Problems might arise during capacitor switching operations. Depending on the charging state high currents may be flowing prior to switching which force the switches and the capacitors to additional loads or stress. With the aid of capacitors connected in parallel it is even possible to induce self-excitation in the three-phase asynchronous machines. However this can be dangerous under certain circumstances. A three-phase asynchronous motor serves here as a dynamic load. The active and reactive power consumption, i.e. the cos φ of the motor is load dependent and not constant. Consequently, fixed reactive power compensation can only optimally compensate one definite operating point.

- Putting the asynchronous machine into operation and recording the operating characteristics.
- Calculating the compensation capacitors.
- Compensation with different capacitors.
- Determining the stepped power.
- Manually activated reactive power compensation.
- Automatic terminal connection detection by the Var reactive power controller.
- Automatic reactive power compensation:
    a) Demonstrate how a modern Var (reactive power) controller works.
    b) Var's automatic detection of connection wiring and thus the phase angles of both current and voltage.
    c) Automatic recognition of connected capacitor banks by briefly switching them on.
    d) Var recognition of reactive power changes and corresponding switching off or on of needed capacitors.

Equipment

Equipment	Part Number	Description
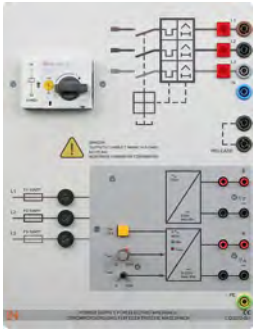	**CO3212-5U7**	Power Supply for Electrical Machines Instruction Manual
	**CO3301-3Z7**	Adjustable 3-Phase, Power Supply 0-450 V / 2A Instruction Manual
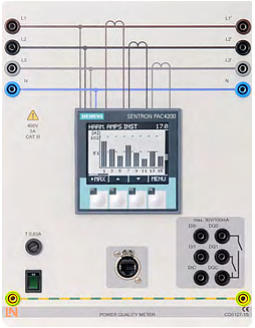	**CO5127-1S**	Power Quality Meter with Graphic Display and Long-term Memory Instruction Manual
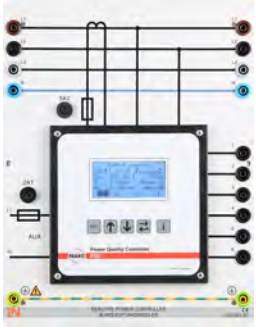	**CO3301-5C**	Var (reactive power) Controller Instruction Manual in English

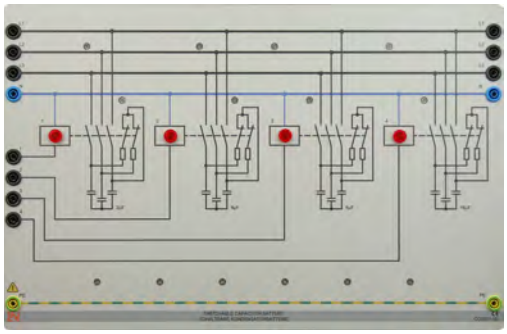	**CO3301-5E7**	Switchable Capacitor Bank
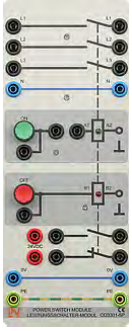	**CO3301-5P**	Power Switch Module Instruction Manual
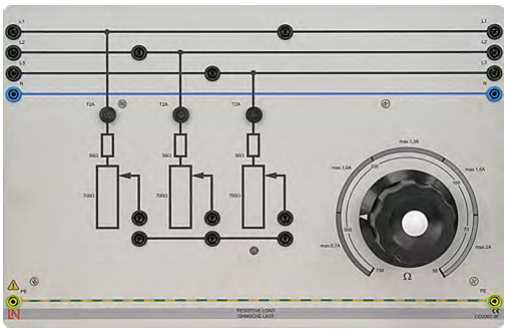	**CO3301-3F**	Variable Ohmic Load, 3-Phase, 1 kW
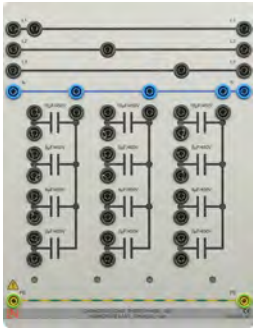	**CO3301-3E**	Capacitive Load, 3-Phase, 1 kW
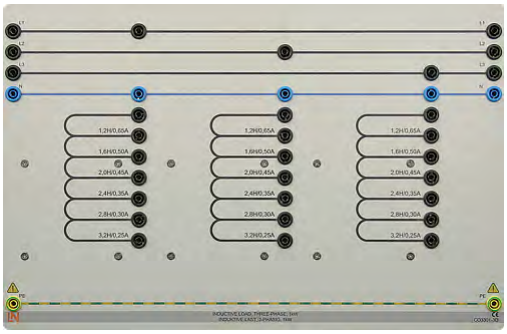	**CO3301-3D**	Inductive Load, 3-Phase, 1 kW

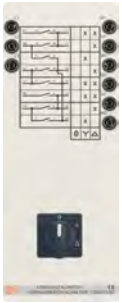	**CO3212-2D**	Star-Delta Switch
	**CO3636-6W7**	Servo Machine Test Bench for 1 kW Machines Instruction Manual
	**SE2672-5G7**	Three-Phase Motor with Squirrel-CageRotor 1 kW

Backgroung/Introduction

"Complex Load"

1: Time domain

Calculation of passive components in the time domain are considered:

a) Ohmic Resistance:

The following generally applies:

$$u(t) = \hat{u} \cos(\quad t + \varphi_u) \tag{1}$$

$$i(t) = \hat{\imath} \cos(\quad t + \varphi_i) \tag{2}$$

$$u(t) = R \cdot i(t) \tag{3}$$

Equations (1) and (2) are inserted in (3):

$$\hat{u} \cdot \cos(\omega t + \varphi_u) = R \cdot \hat{\imath} \cdot \cos(\omega t + \varphi_i) \tag{4}$$

<u>*Coefficient comparison*</u>

$$\hat{u} = R \cdot \hat{\imath} \qquad \text{and} \qquad \varphi_u = \varphi_i \qquad \Rightarrow \quad \varphi = \varphi_u - \varphi_i = 0 \tag{5}$$

(applies for all t-values)

If the zero-phase angles of the voltage and current are identical for ohmic resistances, it is said that the voltage and current are in phase

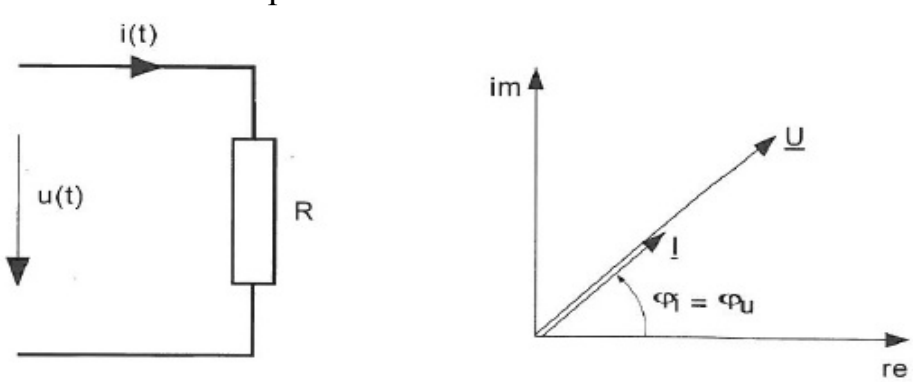

Figure 1:
Phasor Diagram of Ohmic Resistance

For the rms values of sinusoidal currents and voltages the following applies:

$$\hat{u} = \sqrt{2} \cdot U_{RMS} \quad \text{resp.} \quad \hat{i} = \sqrt{2} \cdot I_{RMS} \tag{6}$$

Equation (6) in (5):

$$U_{RMS} = R \cdot I_{RMS} \tag{7}$$

The index for the rms value is normally omitted. The expression is:

$$U = R \cdot I \tag{7}$$

The power for sinusoidal currents and voltages is obtained from:

$$p(t) = u(t) \cdot i(t) \tag{8}$$

with Equations (1), (2) and (6) it follows that:

$$p(t) = 2 \cdot U \cdot I \cdot \cos(\omega t + \varphi_u) \cdot \cos(\omega t + \varphi_i) \tag{9}$$

$$\cos\alpha \cdot \cos\beta = \frac{1}{2} \cdot \cos(\alpha - \beta) + \frac{1}{2} \cdot \cos(\alpha + \beta)$$

$$p(t) = U \cdot I \cdot \cos(2\omega t + \varphi_u + \varphi_i) + U \cdot I \cdot \cos(\varphi_u - \varphi_i) \tag{10}$$

The first term in Equation (10) expresses the oscillation with double the current and voltage frequency. This involves the alternating component of the power.

$$P_{\sim} = U \cdot I \cdot \cos(2\omega t + \varphi_u + \varphi_i) \tag{11}$$

The amplitude is called apparent power S:

$$S = U \cdot I$$

$$[S] = 1\,VA \tag{12}$$

The unit used for apparent power is called volt ampere in order to avoid mistaking it for the active power or wattage ([P] = W) in watts.

Active power

The second term in Equation (10) describes a power level that is constant over time. It is called the arithmetic mean value of the true or real power or also simply referred to as active power P.

$$P = U \cdot I \cdot \cos(\varphi_u - \varphi_i) \quad (13)$$

With the phase shift angle and Equation (12) it follows that:

$$P = S \cdot \cos(\varphi) \quad (14)$$

The quotient comprised of the active power P and the apparent power S is called the power factor:

$$\cos(\varphi) = \frac{P}{S} \quad (15)$$

The power p(t) from Equation (10) is comprised of the DC component P and the alternating component P~.

$$p(t) = P + P_{\sim}$$

$$p(t) = P + S \cdot \cos(2\omega t + \varphi_u + \varphi_i) \quad (16)$$

In the special case of a purely resistive load the following holds true: $\varphi_u = \varphi_i$ and thus $\varphi = \varphi_u - \varphi_i = 0$. From Equation (15) we know that the power factor is cos (φ) = 1. Consequently, the apparent power component S (alternating component of power) and the active power component P (arithmetic mean value of the power) are of equal magnitude, the power p(t) at the load is called the active power oscillation:

$$p(t) = P + P \cdot \cos(2\omega t + \varphi_u + \varphi_i) = P + P \cdot \cos(2\omega t + 2\varphi_i) \quad (17)$$

The active power oscillation at a load (resistive load) is always greater than or equal to zero! This also means that electric power can be consumed at any point in time.

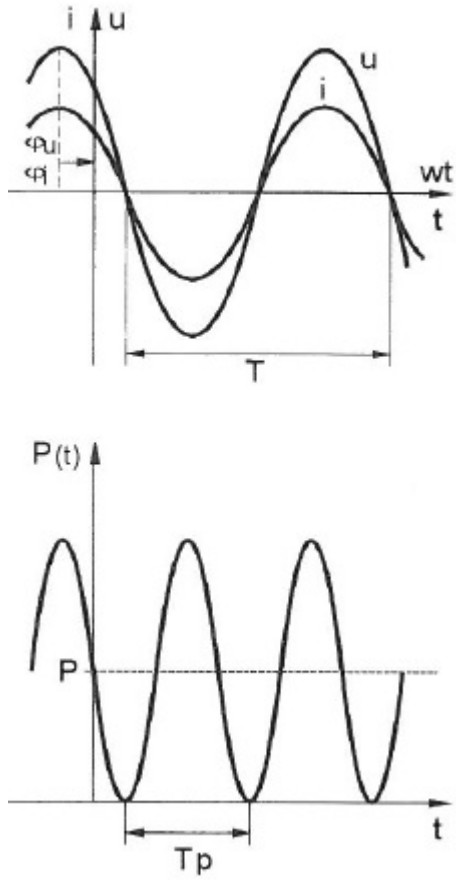

Figure 2:
Time Characteristic of Ohmic Resistance

b) Inductance:

In the case of inductance, the following holds true:

$$u(t) = L\frac{d}{dt}\cdot i(t) \tag{18}$$

Equations (1) and (2) inserted into (18):

$$\hat{u}\cdot\cos(\omega t+\varphi_u) = L\frac{d}{dt}\cdot\hat{\imath}\cdot\cos(\omega t+\varphi_i)$$
$$\hat{u}\cdot\cos(\omega t+\varphi_u) = -L\cdot\hat{\imath}\cdot\omega\cdot\sin(\omega t+\varphi_i) \tag{19}$$

$$-\sin(\alpha) = \cos(\alpha+\frac{\pi}{2}) \tag{20}$$

$$\Rightarrow\quad \hat{u}\cdot\cos(\omega t+\varphi_u) = L\cdot\hat{\imath}\cdot\omega\cdot\cos(\omega t+\varphi_i+\frac{\pi}{2}) \tag{21}$$

Coefficient comparison

$$\hat{u} = \omega \cdot L \cdot \hat{\imath} \qquad \varphi_u = \varphi_i + \frac{\pi}{2} \quad \Rightarrow \quad \varphi = \varphi_u - \varphi_i = \frac{\pi}{2} \mathrel{\hat{=}} 90° \tag{22}$$

(applies for all t-values)

For an inductance the current lags behind the voltage by 90°.

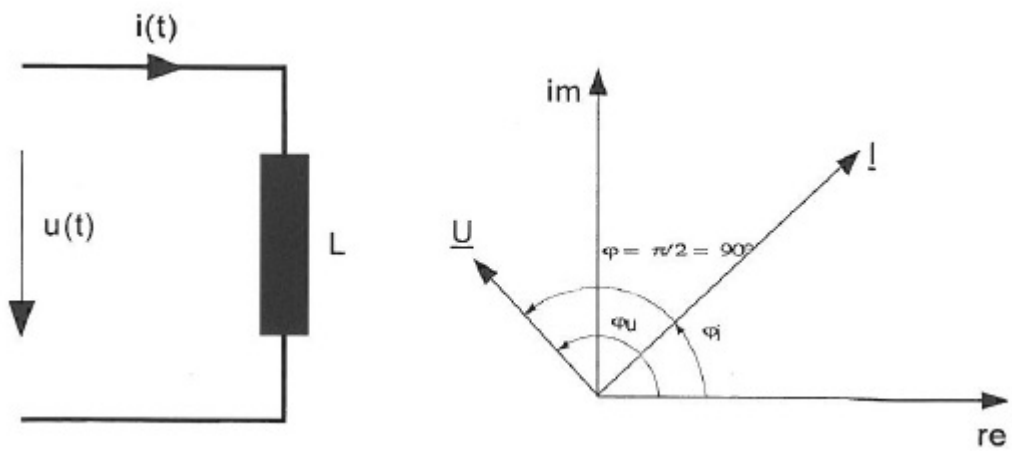

Figure 3:
Phasor Diagram for Inductance

With Equation (6) inserted into Equation (22) we obtain:

$$U_{RMS} = \omega \cdot L \cdot I_{RMS} \qquad U = \omega \cdot L \cdot I \qquad = X_L \cdot I \tag{23}$$

c) Capacitance

In the case of capacitance, the following holds true:

$$i(t) = C \frac{d}{dt} u(t) \tag{24}$$

Inserting Equations (1) and (2) into (24):

$$\hat{\imath} \cdot \cos(\omega t + \varphi_i) = C \frac{d}{dt} (\hat{u} \cdot \cos(\omega t + \varphi_u)) \tag{25}$$

$$\hat{\imath} \cdot \cos(\omega t + \varphi_i) = -C \cdot \hat{u} \cdot \omega \cdot \sin(\omega t + \varphi_u) \tag{26}$$

With Equation (II) it follows that:

$$\hat{\imath} \cdot \cos(\omega t + \varphi_i) = C \cdot \hat{u} \cdot \omega \cdot \cos(\omega t + \varphi_u + \frac{\pi}{2}) \tag{27}$$

Coefficient comparison

$$\hat{\imath} = C \cdot \omega \cdot \hat{u} \qquad \varphi_i = \varphi_u + \frac{\pi}{2} \quad \Rightarrow \quad \varphi = \varphi_u - \varphi_i = -\frac{\pi}{2} \mathrel{\hat{=}} -90° \tag{28}$$

(applies for all t-values)

In the case of capacitance, the current leads the voltage by 90°.

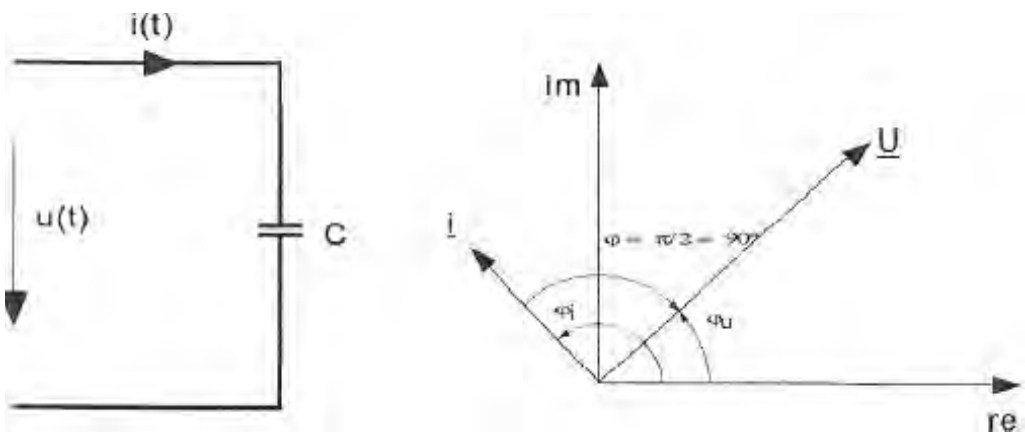

Figure 4:
Phasor Diagram for Capacitance

With Equation (6) inserted into Equation (28) we obtain:

$$I_{eff} = \omega \cdot C \cdot U_{eff} \qquad I = \omega \cdot C \cdot U \qquad I = X_C \cdot U \tag{29}$$

Reactive power

For both the inductance and the capacitance the phase shift angle is cos Ø ≠ 0. Here too the following applies:

$$p(t) = P + P_{\sim}$$

$$p(t) = P + S \cdot \cos(2\omega t + \varphi_u + \varphi_i)$$

where:

$$\varphi_u = \varphi + \varphi_i$$

$$p(t) = P + S \cdot \cos(2\omega t + 2\varphi_i + \varphi)$$

where:

$$\cos(\alpha \pm \beta) = \cos\alpha \cdot \cos\beta \mp \sin\alpha \cdot \sin\beta \tag{30}$$

$$p(t) = \{P + S \cdot \cos(\varphi) \cdot \cos(2\omega t + 2\varphi_i)\} - S \cdot \sin(\varphi) \cdot \sin(2\omega t + 2\varphi_i) \tag{31}$$

The term in the curly bracket is the active power oscillation. The second term expresses the reactive power oscillation. The expression is also called reactive power Q. To distinguish the reactive power from the other power levels it has the unit Var.

$$Q = S \cdot \sin(\varphi)$$

$$[Q] = Var \tag{32}$$

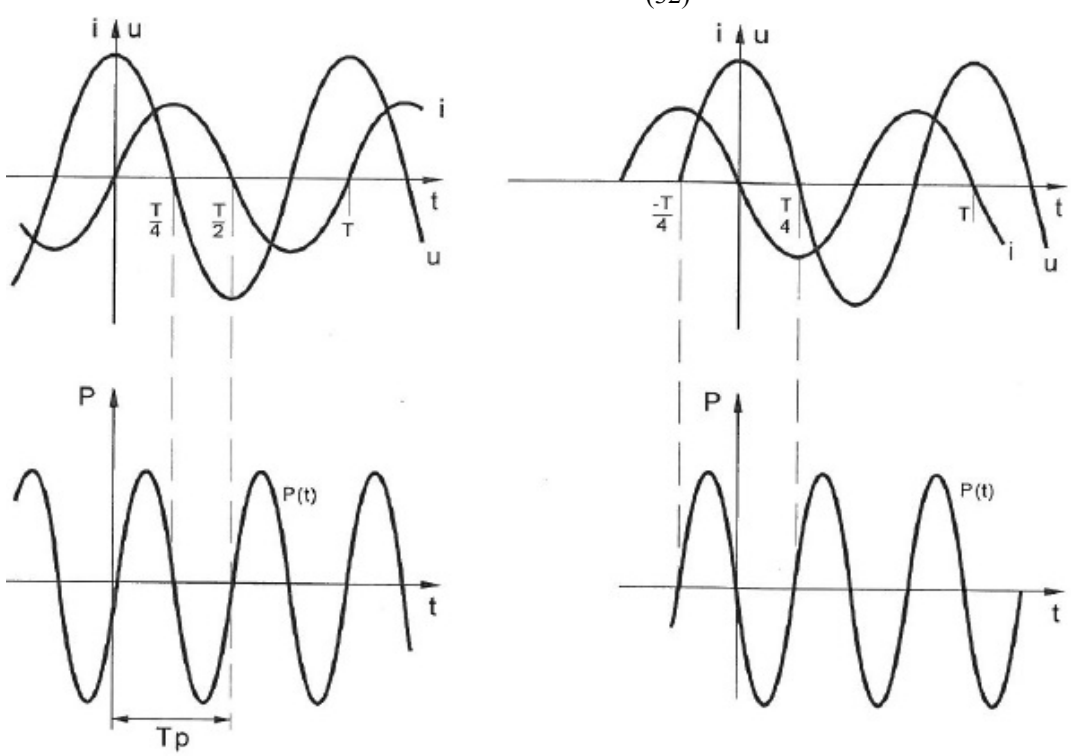

Figure 5:

Reactive power

Derivation and computation in the time domain is very complex and for that reason we would now like to introduce the complex number plane here. However, in physical terms only the power oscillation is relevant in the time domain p(t).

2: Frequency Domain / Complex Approach

Although there is real visual information to be in possession of super positioning sinusoidal variables (e.g.. voltages, currents) with the aid of phasor diagrams, it only has the accuracy of a rough representation. This disadvantage is offset when the phasors are described mathematically with the aid of complex numbers.

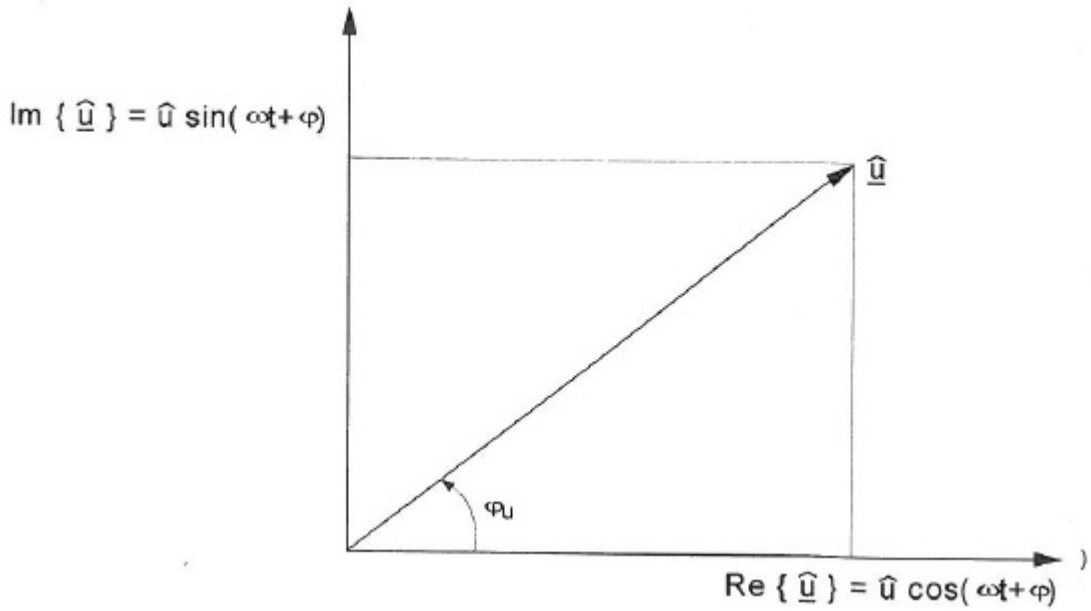

Figure 6:
Phasor diagram

The context shall be elaborated on using the example of a sinusoidal voltage:
At the point in time t = 0:

$$\hat{u} \cdot \cos(\omega t + \varphi_u)$$

is the real part and

$$\hat{u} \cdot \sin(\omega t + \varphi_u)$$

is the imaginary part of a complex voltage.

$$\Rightarrow \quad \underline{u} = \hat{u} \cdot \cos(\omega t + \varphi_u) + j \cdot \hat{u} \cdot \sin(\omega t + \varphi_u) \qquad (33)$$

It is automatically taken into account that the phasor rotates at a constant angular velocity ω in the positive rotation direction mathematically..
Using Euler's equation:

$$e^{j\alpha} = \cos(\alpha) + j \cdot \sin(\alpha) \qquad (IV)$$

$$\Rightarrow \quad \underline{u}(t) = \hat{u} \cdot e^{j(\omega t + \varphi_u)} \tag{34}$$

The expression (equation 34) is depicted as a voltage with a fully fledged complex number. The real part of the voltage as a complex number describes the time or dynamic characteristic of the voltage.

$$u(t) = \mathrm{Re}\{\underline{u}\} = \hat{u} \cdot \cos(\omega t + \varphi) \tag{35}$$

Next, we shall make the following assumptions:

- The frequency is specified additionally.
- The sinusoidal quantity is specified for the time point t = 0, this means we can ignore the description of the time dependency.
- From now on only effective values are used.

Accordingly, we obtain the complex number for the voltage:

$$\underline{U} = U \cdot e^{j\varphi_u} = U \cdot \exp(j\varphi_u) = U \angle \varphi_u = U \cdot (\cos(\varphi_u) + j \cdot \sin(\varphi_u)) \tag{36}$$

<u>*Complex number for impedance*</u>

$$Z(t) = \frac{u(t)}{i(t)} = \frac{\hat{u} \cdot e^{j\omega t} \cdot e^{j\varphi_u}}{\hat{i} \cdot e^{j\omega t} \cdot e^{j\varphi_i}} = \frac{\hat{u} \cdot e^{j\varphi_u}}{\hat{i} \cdot e^{j\varphi_i}}$$

$$\Rightarrow \quad Z(t) \neq f(t) \tag{37}$$

$$\underline{Z} = \frac{U \cdot e^{j\varphi_u}}{I \cdot e^{j\varphi_i}} = \frac{U}{I} e^{j(\varphi_u - \varphi_i)} = \frac{\underline{U}}{\underline{I}}$$

$$\text{Def.:} \quad \underline{Z} = R + jX \tag{38}$$

Def.:

With equation (6) we obtain:

$$|\underline{Z}| = \frac{\hat{u}}{\hat{i}} = \frac{U_{eff}}{I_{eff}} = \frac{U}{I} \tag{39}$$

The definition of R and X will be investigated using the complex number for the power:

$$I \cdot e^{-j\varphi_i} = \underline{I}^* \qquad \text{(Conjugated complex current)}$$

$$\underline{S} = U \cdot e^{j\varphi_u} \cdot I \cdot e^{-j\varphi_i} = U \cdot I \cdot e^{j(\varphi_u - \varphi_i)} = \underline{U} \cdot \underline{I}^*$$

$$\underline{S} = \underline{U} \cdot \underline{I}^* = \underline{Z} \cdot \underline{I} \cdot \underline{I}^* = \underline{Z} \cdot I^2 \tag{40}$$

where:

$$\underline{S} = P + jQ = (R + jX) \cdot I^2 \tag{41}$$

The active power P is converted at the real component of the complex impedance Z, while the reactive power Q is converted at the imaginary component.

Equivalent Resistance

$$\mathrm{Re}\{\underline{Z}\} = R = \frac{P}{I^2} \tag{42}$$

Reactance

$$\mathrm{Im}\{\underline{Z}\} = X = \frac{Q}{I^2} \tag{43}$$

a) Ohmic resistance

The following holds true:

$$\varphi_u = \varphi_i \quad \Rightarrow \quad \varphi_u - {}_i = 0$$

$$\underline{Z} = Z \cdot e^{j(\varphi_u - \varphi_i)} = Z \cdot e^{j0} = R \tag{44}$$

Ohm's law

$$\underline{U} = \underline{Z} \cdot \underline{I} = R \cdot \underline{I} \tag{45}$$

Power at the ohmic or resistive load

$$\underline{S} = \underline{Z} \cdot I^2 = R \cdot I^2 = P \quad (46)$$

b) Inductance

For current and voltage at an inductance the following is true:

$$\underline{I} = I \cdot e^{j(\omega t + \varphi_i)} \quad (47)$$

$$\underline{U} = L \frac{d}{dt} \underline{I} = L \frac{d}{dt} I \cdot e^{j(\omega t + \varphi_i)} = j \cdot \omega \cdot L \cdot I \cdot e^{j(\omega t + \varphi_i)} = j \cdot \omega \cdot L \cdot \underline{I} \quad (48$$

Ohm's law

$$\underline{U} = j \cdot X_L \cdot \underline{I} \quad (49)$$

Inductive reactance

$$\underline{Z} = R + j \cdot X = j \cdot X_L \quad (50$$

The following is true for the power:

$$\underline{S} = \underline{U} \cdot \underline{I}^* = \underline{Z} \cdot I^2 = j \cdot X_L \cdot I^2 = j \cdot Q_L \quad (51)$$

c) Capacitance

For the current and voltage at a capacitance the following is true:

$$\underline{U} = U \cdot e^{j(\omega t + \varphi_u)} \quad (52)$$

$$\underline{I} = C \frac{d}{dt} \underline{U} = C \frac{d}{dt} U \cdot e^{j(\omega t + \varphi_u)} = j \cdot \omega \cdot C \cdot U \cdot e^{j(\omega t + \varphi_u)} = j \cdot \omega \cdot C \cdot \underline{U} \quad (53)$$

Ohm's law and the complex number of conductance

$$\underline{I} = \frac{1}{\underline{Z}} \cdot \underline{U} = \underline{Y} \cdot \underline{U}$$

where

$$\underline{Y} = \frac{1}{\underline{Z}}$$

$$X_C = -\frac{1}{\omega \cdot C} \tag{54}$$

Capacitive reactance

$$\underline{Z} = R + j \cdot X = \frac{1}{j \cdot \omega \cdot C} = -\frac{j}{\omega \cdot C} = j \cdot X_C \tag{55}$$

The following is true for the power:

$$\underline{S} = \underline{U} \cdot \underline{I}^* = \underline{Z} \cdot I^2 = j \cdot X_C \cdot I^2 = -j \frac{I^2}{\omega \cdot C} = j \cdot Q_C$$

$$Q_C = -\frac{I^2}{\omega \cdot C} \tag{56}$$

3: The Balanced Three-phase System

A three-phase system is called balanced if it is built up on three sinusoidal quantities of equal phase and magnitude. The amplitudes of the phase windings are all equal and the zero phase angles are each offset by 120° respectively. Example:

$$\underline{U}_1 = U \cdot e^{j0^\circ} = U$$

$$\underline{U}_2 = U \cdot e^{-j120^\circ} = U(-0.5 - j0.866)$$

$$\underline{U}_3 = U \cdot e^{-j240^\circ} = U \cdot e^{j120^\circ} = U(-0.5 + j0.866) \tag{57}$$

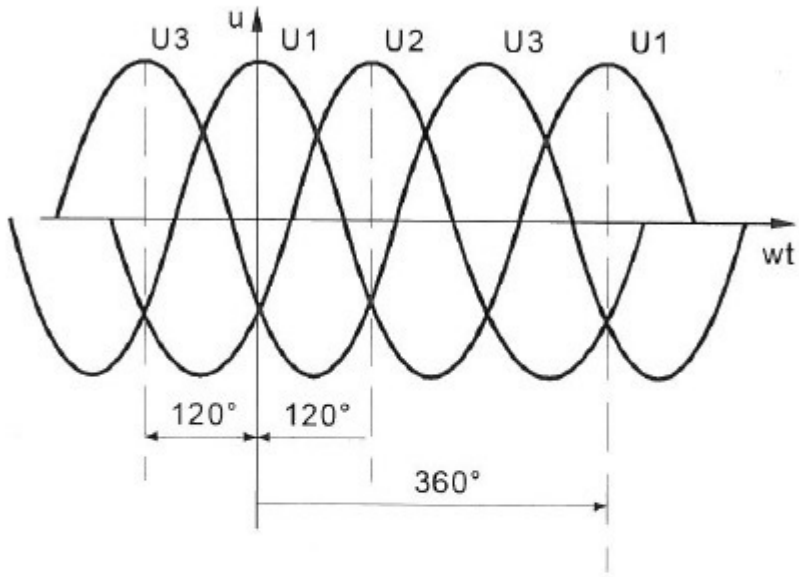

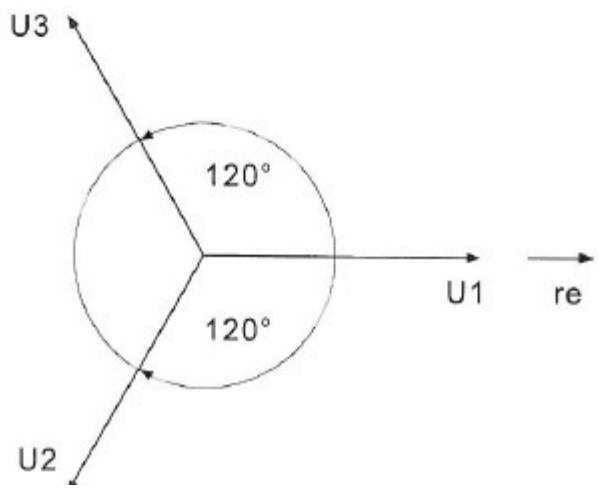

Figure 7:
Phasor Diagram for a Three-phase System

The sum of the three balanced quantities is always zero.

$$\sum \underline{U} = \underline{U}_1 + \underline{U}_2 + \underline{U}_3 = U(1 - 0.5 - j0.866 - 0.5 + j0.866) = 0 \tag{58}$$

The three independent voltage sources can be connected in star or in delta connection configuration.

a) Star Connection

In star connection the three ends of the phase windings U_2, V_2, and W_2 are interconnected. The nodal point or junction is called the star point. The phase conductors L_1, L_2, and L_3 are connected to the terminals U_1,, V_1, and W_1. If the star point includes the neutral conductor (N) connection, then this is referred to as a four-wire configuration. If only the phase conductors are connected, then we are dealing with a three-wire configuration. The voltages with respect to star point are designated U_{1N},, U_{2N}, and U_{3N} (phase voltages) while the phase-to-phase voltages are labeled U_{12}, U_{23}, and U_{31}.

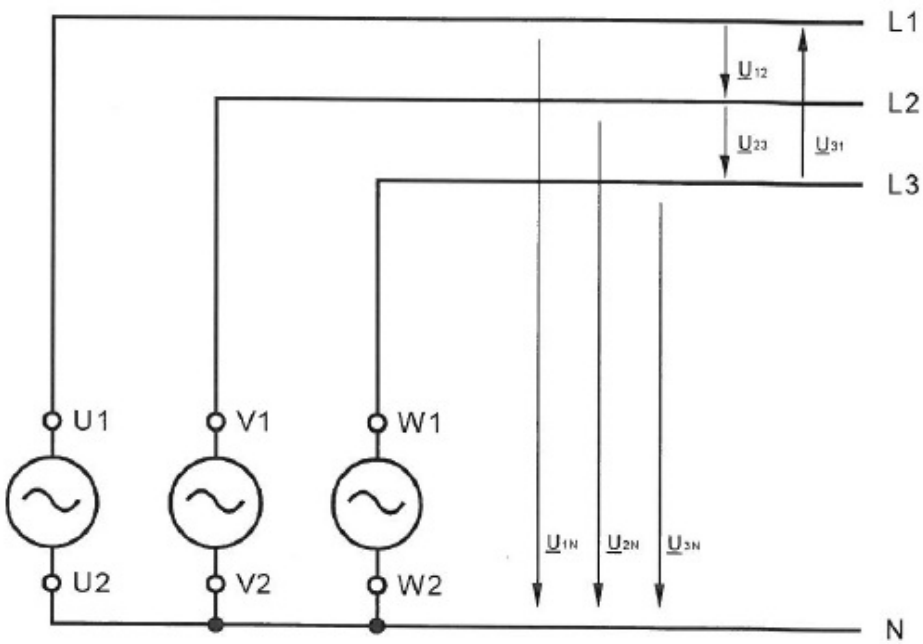

Figure 8:
Star Connection

The phase-to-phase voltages are determined based on the phase voltages. In accordance with Kirchhoff's voltage rule we obtain:

$$\begin{aligned}
\underline{U}_{12} + \underline{U}_{2N} - \underline{U}_{1N} = 0 \quad &\Rightarrow \underline{U}_{12} = \underline{U}_{1N} - \underline{U}_{2N} \\
\underline{U}_{23} + \underline{U}_{3N} - \underline{U}_{2N} = 0 \quad &\Rightarrow \underline{U}_{23} = \underline{U}_{2N} - \underline{U}_{3N} \\
\underline{U}_{31} + \underline{U}_{1N} - \underline{U}_{3N} = 0 \quad &\Rightarrow \underline{U}_{31} = \underline{U}_{3N} - \underline{U}_{1N}
\end{aligned} \tag{59}$$

With the values from equation (57) we obtain for the phase-to-phase voltages:

$$\underline{U}_{12} = U \cdot e^{j0^\circ} - U \cdot e^{-j120^\circ} = U(1 + 0.5 + j0.866) = U(1.5 + j0.866) = \sqrt{3} \cdot U \cdot e^{j30^\circ}$$

$$\underline{U}_{23} = U \cdot e^{-j120^\circ} - U \cdot e^{j120^\circ} = U(-0.5 - j0.866 + 0.5 - j0.866) = U(-j1.732) = \sqrt{3} \cdot U \cdot e^{-j90^\circ}$$

$$\underline{U}_{31} = U \cdot e^{j120^\circ} - U \cdot e^{j0^\circ} = U(-0.5 + j0.866 - 1) = U(-1.5 + j0.866) = \sqrt{3} \cdot U \cdot e^{j150^\circ}$$

In the phasor diagram the voltages appear as follows:

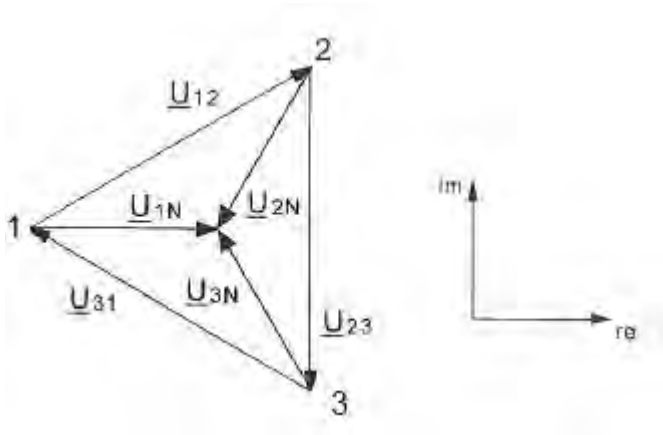

Figure 9:
Phasor Diagram

In the phasor diagram we recognize that the phase-to-phase voltages as well as the star voltages form a symmetrical voltage system. The phase-to-phase voltage is greater than the star voltage by a factor of √3.

b) Delta connection

If you connect one phase winding end each with the beginning of the next phase winding, then a so-called delta connection configuration is obtained. There are only three connection terminals for the phase conductors and thus also only three voltages U_{12}, U_{23}, and U_{31}.

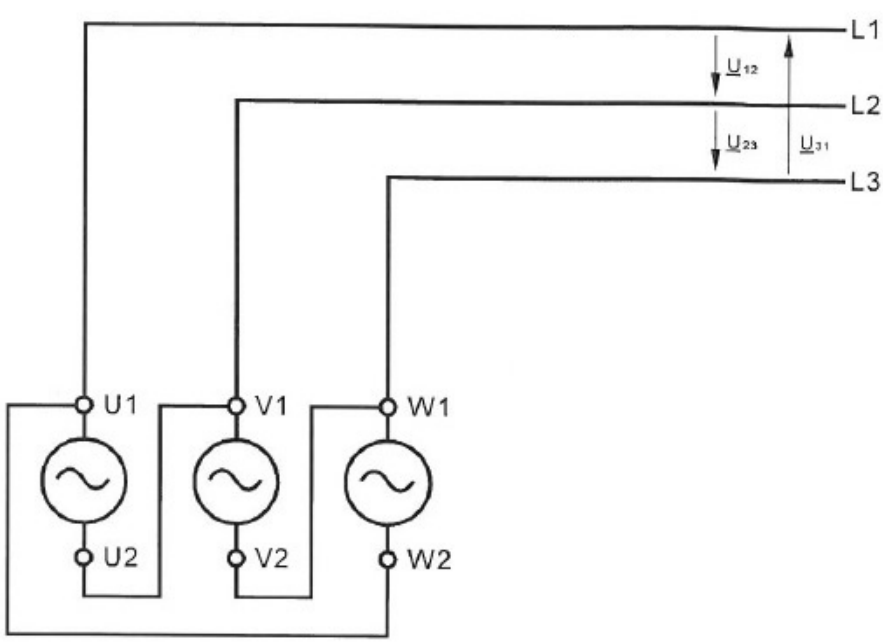

Figure 10:
Delta Connection

Sample Calculation

$$\underline{U}_{12} + \underline{U}_{2N} - \underline{U}_{1N} = 0 \quad \Rightarrow \underline{U}_{12} = \underline{U}_{1N} - \underline{U}_{2N}$$
$$\underline{U}_{23} + \underline{U}_{3N} - \underline{U}_{2N} = 0 \quad \Rightarrow \underline{U}_{23} = \underline{U}_{2N} - \underline{U}_{3N}$$
$$\underline{U}_{31} + \underline{U}_{1N} - \underline{U}_{3N} = 0 \quad \Rightarrow \underline{U}_{31} = \underline{U}_{3N} - \underline{U}_{1N}$$

$$\underline{U}_{12} = 230V \cdot e^{j0^\circ} - 230V \cdot e^{-j120^\circ} = 230V(1 + 0.5 + j0.866) = 400V \cdot e^{j30^\circ}$$

$$\underline{U}_{23} = 230V \cdot e^{-j120^\circ} - 230V \cdot e^{j120^\circ} = 230V(-0.5 - j0.866 + 0.5 - j0.866) = 400V \cdot e^{-j90^\circ}$$
$$\underline{U}_{31} = 230V \cdot e^{j120^\circ} - 230V \cdot e^{j0^\circ} = 230V(-0.5 + j0.866 - 1) = 400V \cdot e^{j150^\circ}$$

$$\underline{S}_1 = P + jQ = \underline{U}_{1N} \cdot \underline{I}_1^* = 230V \cdot e^{j0^\circ} \cdot 0.226A \cdot e^{-j60.5^\circ} = 51.98VA \cdot e^{-j60.5^\circ} = 25.59W - j45.24W$$
$$\underline{S}_2 = P + jQ = \underline{U}_{2N} \cdot \underline{I}_2^* = 230V \cdot e^{-j120^\circ} \cdot 0.226A \cdot e^{j59.5^\circ} = 51.98VA \cdot e^{-j60.5^\circ} = 25.59W - j45.24$$
$$\underline{S}_3 = P + jQ = \underline{U}_{3N} \cdot \underline{I}_3^* = 230V \cdot e^{-j240^\circ} \cdot 0.226A \cdot e^{j179.5^\circ} = 51.98VA \cdot e^{-j60.5^\circ} = 25.59W - j45.24$$

$$\underline{S}_g = \sum \underline{S} = \underline{S}_1 + \underline{S}_2 + \underline{S}_3 = 3 \cdot (51.98VA \cdot e^{-j60.5^\circ}) = 155.94VA \cdot e^{-j60.5^\circ} = 76.77\text{ W} - j135.72Var$$

$$P = \mathrm{Re}\{\underline{S}\} = 76.77\text{ W}$$
$$Q = \mathrm{Im}\{\underline{S}\} = -135.72Var$$

$$\underline{S} = S \cdot e^{j\varphi} = S(\cos\varphi + j\sin\varphi)$$
$$\Rightarrow |P| = S \cdot \cos(\varphi)$$
$$\Rightarrow |Q| = S \cdot \sin(\varphi)$$

$$|\underline{S}_g| = 3 \cdot S_{\text{Phase}} = 3 \cdot U_{\text{Phase}} \cdot I_{\text{Phase}} = 3 \cdot \frac{U_{\text{Line}}}{\sqrt{3}} \cdot I_{\text{Line}} = \sqrt{3} \cdot U_{\text{Line}} \cdot I_{\text{Line}}$$

Given:

$$\underline{U}_{1N} = 230V \cdot e^{j0^\circ} \qquad R = 500\Omega$$
$$\underline{U}_{2N} = 230V \cdot e^{-j120^\circ} \qquad C = 3\mu F$$
$$\underline{U}_{3N} = 230V \cdot e^{-j240^\circ} \qquad f = 60Hz$$

To be resolved: all voltages, currents and power levels.

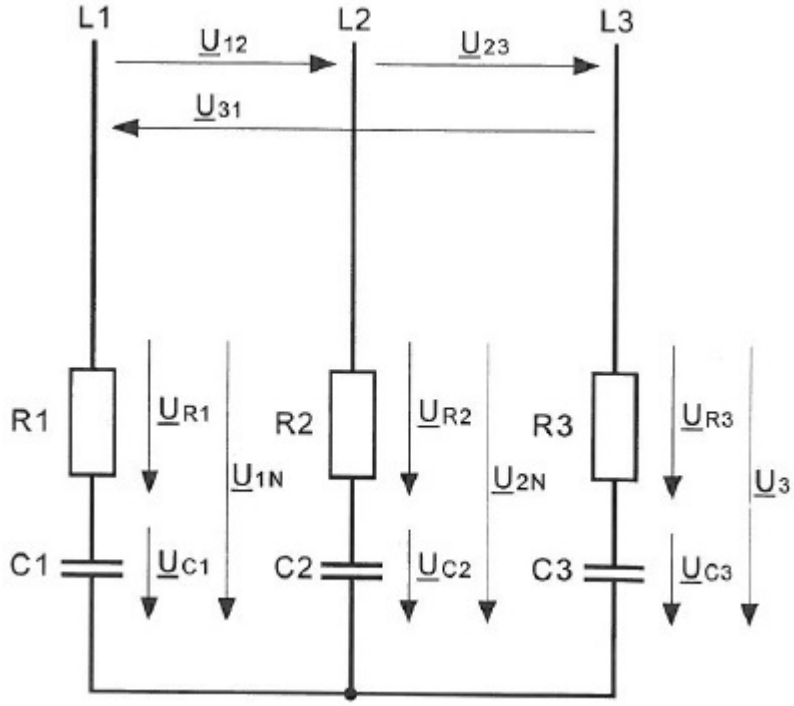

Figure 11:
Sketch

$$\underline{Z} = R - \frac{j}{\omega \cdot C} = 500\Omega - \frac{j}{2 \cdot \pi \cdot 50 \cdot s^{-1} \cdot 3\mu F} = 500\Omega - j\ 884\Omega = 1015.8\Omega \cdot e^{-j60.5^\circ}$$

$$\underline{I}_1 = \frac{\underline{V}_{1N}}{\underline{Z}} = \frac{230V \cdot e^{j0^\circ}}{1015.8\Omega \cdot e^{-j60.5^\circ}} = 0.226A \cdot e^{j60.5^\circ}$$

$$\underline{I}_2 = \frac{\underline{V}_{2N}}{\underline{Z}} = \frac{230V \cdot e^{-j120^\circ}}{1015.8\Omega \cdot e^{-j60.5^\circ}} = 0.226A \cdot e^{-j59.5^\circ}$$

$$\underline{I}_3 = \frac{\underline{V}_{3N}}{\underline{Z}} = \frac{230V \cdot e^{-j240^\circ}}{1015.8\Omega \cdot e^{-j60.5^\circ}} = 0.226A \cdot e^{-j179.5^\circ}$$

$$\underline{V}_{R1} = \underline{I}_1 \cdot R = 0.226A \cdot e^{j60.5^\circ} \cdot 500\Omega = 113V \cdot e^{j60.5^\circ}$$

$$\underline{V}_{R2} = \underline{I}_2 \cdot R = 0.226A \cdot e^{-j59.5^\circ} \cdot 500\Omega = 113V \cdot e^{-j59.5^\circ}$$

$$\underline{V}_3 = \underline{I}_3 \cdot R = 0.226A \cdot e^{-j179.5^\circ} \cdot 500\Omega = 113V \cdot e^{-j179.5^\circ}$$

$$\underline{V}_{C1} = \underline{I}_1 \cdot \frac{-j}{\omega \cdot C} = 0.226A \cdot e^{j64.77^\circ} \cdot 884\Omega \cdot e^{-j90^\circ} = 199.78V \cdot e^{-j29.5^\circ}$$

$$\underline{V}_{C2} = \underline{I}_2 \cdot \frac{-j}{\omega \cdot C} = 0.226A \cdot e^{-j55.23^\circ} \cdot 884\Omega \cdot e^{-j90^\circ} = 199.78V \cdot e^{-j149.5^\circ}$$

$$\underline{V}_{C3} = \underline{I}_3 \cdot \frac{-j}{\omega \cdot C} = 0.226A \cdot e^{-j175.23^\circ} \cdot 884\Omega \cdot e^{-j90^\circ} = 199.78V \cdot e^{-j269.5^\circ}$$

Manual Reactive Power Compensation

The power factor cos φ for sinusoidal AC voltages and currents is the ratio of active power to apparent power. The apparent power is defined as the product made up of rms values of current and voltage:

$$|S| = V \cdot I \text{ [VA]}$$

Use the complex number approach:

$$S = V \cdot I^* = P + jQ$$

In a three-phase system with balanced load, the total active power P_Σ is calculated according to:

$$P_\Sigma = 3 \cdot V_{L\text{-}N} \cdot I_{L\text{-}N} \cdot \cos(\varphi_V - \varphi_I)$$
$$P_\Sigma = \sqrt{3} \cdot V_{L\text{-}L} \cdot I_{L\text{-}L} \cdot \cos(\varphi_U - \varphi_I)$$
$$P_\Sigma = \sqrt{3} \cdot V_{L\text{-}L} \cdot I_{L\text{-}L} \cdot \cos(\varphi)$$

($V_{L\text{-}N}$, $I_{L\text{-}N}$: phase winding variables, $(\varphi_V - \varphi_I)$: angle between current and voltage)

Irrespective of the type of configuration (star or delta connection) of the load, the total power in balanced three-phase systems is calculated as follows:

$$S_\Sigma = \sqrt{3} \cdot V_{L\text{-}L} \cdot I_{L\text{-}L}$$
$$P_\Sigma = S_\Sigma \cdot \cos(\varphi_V - \varphi_I) = S_\Sigma \cdot \cos(\varphi)$$
$$Q_\Sigma = S_\Sigma \cdot \sin(\varphi_V - \varphi_I) = S_\Sigma \cdot \sin(\varphi)$$
$$S_\Sigma = \sqrt{(P^2_\Sigma + Q^2_\Sigma)}$$

Lagging reactive power is produced when magnetic fields build up, for example, in transformers and motors. This reactive power leads to a situation where the power supply grids in question are subjected to additional load. This means higher currents flow, which causes greater power losses in the cables and more severe voltage drops, i.e. cables with bigger cross-sections have to be laid. Transformers cannot be operated at full capacity; a transformer with S_N = 100 kVA can transmit e.g.

1. P = 0 kW	Q = 100 kvar	cos φ = 0	
2. P = 70.7 kW	Q = 70.7 kvar	cos φ = 0.707	φ = 45°
3. P = 100 kW	Q = 0	cos φ = 1	

Since only active power really constitutes usable power, reactive power makes power transmission more expensive for electricity utilities, causing greater power losses and reducing the efficiency of electrical equipment utilization. By reducing reactive power levels, transformers, switching equipment and power cables of smaller size can be used, i.e. additional loads can be connected to existing systems without any additional enhancements needed for the equipment.

Sample Calculation:

- Motor:
  - P_N = 30 kW0 kW
  - V_Δ = 400 V
  - f = 50 Hz
  - η = 0.91
  - cos φ_{Mot} = 0.8= 0.8

- Cable line:
  - Type of installation
  - B2
  - Ambient temperature 25°C

$$I = \frac{P_N}{\eta\sqrt{3}U\cos\varphi_{not}} = \frac{30.000W}{0.91*\sqrt{3}*400V*0.8} = 59.5A$$

According to IEC 60364-4-43 (DIN VDE 0100-430) there follows a cable cross-section: A = 16 mm2 with a permissible current loading capacity of I_Z =65 A.

Reactive power:

$$P_{el} = \frac{P_N}{\eta} = 33kW$$

$$S_{Mot} = \frac{P_{el}}{\cos \varphi_{Mot}} = 41.2kVA$$

$$Q_{Mot} = S_{Mot} \sin \varphi_{Mot} = P_{el} \tan \varphi_{Mot} = 24.7k \text{ var}$$

Reactive power reduction to cos φ_2 = 0.95:

$$Q_C = P_{el} * \tan \varphi_{Mot} - P_{el} * \tan \varphi_2 = P_{el}(\tan \varphi_{Mot} - \tan \varphi_2) = 13.9k \text{ var}$$

$$I_2 = \frac{P_{el}}{\sqrt{3} * U * \cos \varphi_2} = 50.0A$$

with a cable cross-section of A = 10 mm², I_Z = 50 A.

For this example of a 30 kW motor, we obtain a cross-sectional reduction in the feed line from 16 mm^2 to 10 mm^2 due to the permissible current loading capacity. Here we shall not consider how to determine cable cross-section with respect to voltage drop and resistance to short-circuiting. The electric power utilities and operators strive to keep the reactive power component of their power transmissions within certain limits. The local power utility stipulates maximum cos φ. If a customer exceeds this stipulated value, the power utility operator can demand an improvement in cos φ or even charge customers for their reactive power usage.

Lagging reactive power can be compensated by means of capacitive reactive power. Reactive power producers include, e.g. synchronous generators, which can output either lagging (inductive) reactive power or leading (capacitive) reactive power depending on the excitation state of the generator. Capacitors are also able to compensate for lagging reactive power. For that reason, it makes sense to arrange capacitors in the proximity of non-inductive or non-reactive loads. Accordingly, one capacitor is assigned to each single load for single motor compensation. The reactive power is compensated at the location where it arises and thus removes reactive power transmission from the power feed line.

Example:

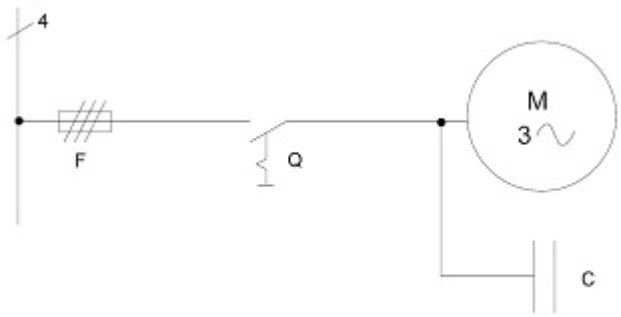

Figure 12:
Asynchronous Motor with Capacitor for Reactive Power Compensation

The capacitors are connected to the motor winding without any extra switches or fuses. There are no discharge mechanisms required for the capacitors because discharge takes place via the motor windings. An overload protection device is connected upstream and set to lower current tripping values. After the motor has been disconnected from the mains power system difficulties can still arise. The machine running down can transition to generator operating mode due to self-excitation and bring about a voltage spike compared to the mains power voltage. This normally does not happen if the capacitor current is lower than the no-load magnetization current of the motor. A value of 90 % is recommended.

$$Qc = 0.9 * \sqrt{3} * V_N * I_0 \;\; 0$$

$I_0 =$ no-load current

$Q_c =$ total reactive power with the capacitors

"Live" components of the motor still under voltage should not be made contact with prior to motor standstill. It is particularly hazardous when voltage is maintained due to self-excitation of motors with a braking mechanism, which is supposed to trip when there is a voltage failure (lift motor).

Motors with Star-Delta Switching

Six pole capacitors can be used for motor power levels of up to 20 kW. These capacitors are connected in parallel to each motor phase winding.

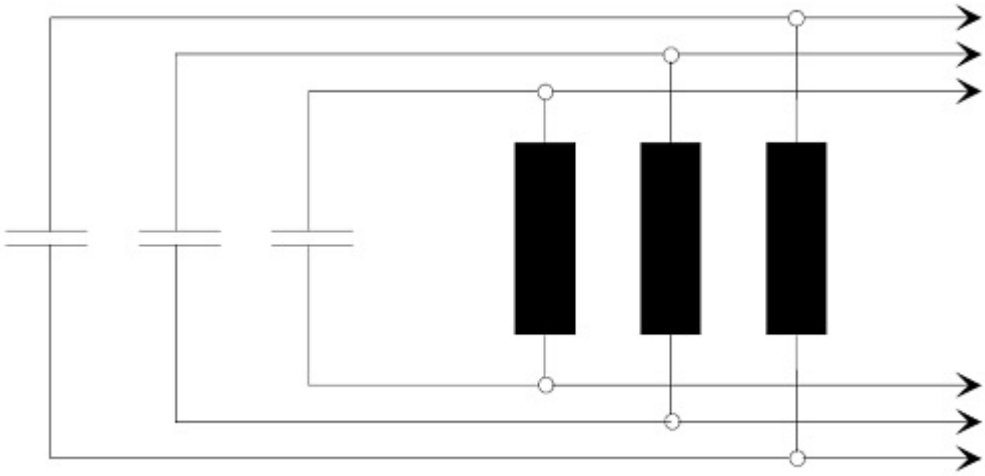

Figure 13:
Arrangement of Capacitors for Motor Winding up to 20 kW

The capacitors, just like the motor winding, is connected in star or delta configuration so that there is compensation commencing also during start-up. During switchover from star connection to delta connection, the machine is briefly disconnected from the mains power supply. The motor becomes an asynchronous generator and can be operating in phase-opposition when re-connected to the mains power grid. This means there can be high loads due to charging currents for both the switch and the capacitor. For higher power levels (>20 kW) standard capacitors are equipped with their own protective devices. The discharging of the capacitor is then carried out using low-ohmic resistors once the protective device has released. The main contacts must operate bounce-free so that the extreme switch-on current does not cause any bonding of the contacts.

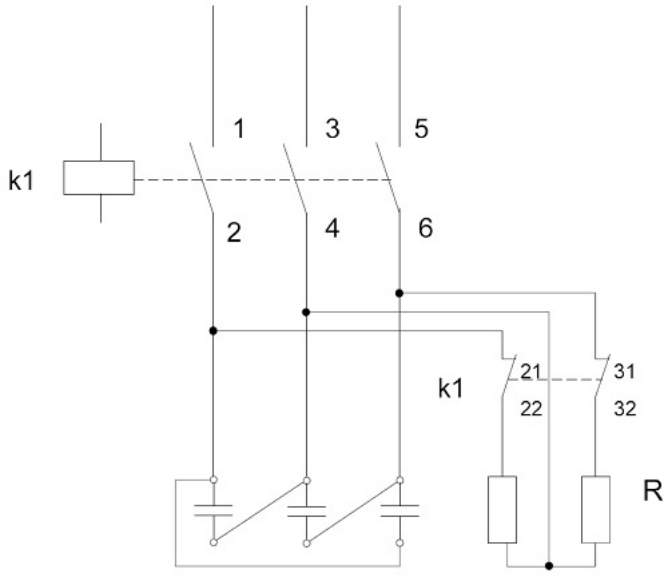

Figure 14:
Discharging of the Capacitors when the Protective Device has released

Automatic Reactive Power Compensation

Centrally arranged compensation systems act to relieve the feeding power grid from having to transmit reactive power. However, the factory-internal power system does not shed any load, the reactive power continues to submit cables and switching equipment to loads so that individual and group compensation may still make sense. A centrally arranged compensation system requires, among other things, less capacitor power than single compensation, because it is not designed for installed power but also takes simultaneous demand factor into consideration.

Thanks to central compensation there is a rate dependent savings in reactive power. In the case of a large scale consumer of electric power, special contracts are agreed to between the power utilities and the customers. If the amount of reactive power exceeds 50% of the active power, then the reactive power must be paid with 15% of the average price for active power. 50% of the active power demand is the free-of-charge amount of reactive power.

Example:

W_p = 60,000 kWh per month
W_Q = 70,000 kVarh per month
Free amount of reactive power demand: W_Q = 30,000 kVarh
Calculated reactive power demand: 40,000 kVarh

Costs:

40,000 kvarh * 0.15 $ * 0.15 / kVarh = 900 $ per month

Centrally-organized compensation systems must adjust to changing load conditions and, for that reason, it is necessary that the capacitors be switched on or off step-by-step. This is performed by a VAR controller which constantly determines reactive power demand based on the running current and voltage values. If the reactive power component exceeds certain thresholds, an alarm signal is generated. In the case of lagging reactive power, one or even more control contacts are closed after a time delay. Accordingly, the VAR controller switches capacitors on in stages to reach the desired power factor. Once demand for lagging reactive power is reduced, overcompensation arises and the capacitors are switched off again.

In order to perform the control switching in sufficiently fine stages, the capacitors are subdivided into groups. Individual stages of around 10% - 15% of the feed power makes sense. This more or less rules out any potential voltage variations during switching stages. If all of the stages are selected with the same size, this is referred to as an "arithmetic series". A "geometric series" is the case when the capacitor sizes are successively multiplied by two (1 : 2 : 4).

Example:

Total compensation power 70 kVar

Stages:
10 kVar, 20 kVar, 40 kVar

Switching Step	10 kVar	20 kVar	40 kVar	Total power kVar
0	-	-	-	0
1	X	-	-	10
2	-	X	-	20
3	X	X	-	30
4	-	-	X	40
5	X	-	X	50
6	-	X	X	60
7	X	X	X	70

The stage power is determined by the smallest capacitor unit.

1: VAr controller PQC

The VAR or reactive power controller used in the experiment automatically detects the terminal (phase relation) and which capacitor stages are connected. The reactive current component and the active current component of the power grid is determined inside the VAr controller based on the signals being constantly monitored on the electric circuit (measured using current converter) and the voltage circuit (power mains connection). If the reactive power component exceeds certain thresholds, which the VAR controller determines during initial measurement, then after a time delay, capacitors are switched on or off accordingly. Monitoring of the reactive power compensation is possible thanks to the built-in cos(φ) indicator. The "loading back" circuit is an outstanding feature that is especially easy on the system. It ensures that, on average, all compensation stages of equal size are connected with equal frequency. When capacitors are switching, very high switch-on currents can arise, which in extreme cases can reach as high as 150 times the nominal current. Without taking any precautionary measures, this would wear out the contactor contacts after only just relatively few switching operations. One remedy for this could be the configuration of inductor-capacitor units. An inductance of approx. 5 µH (4 turns on an air-core inductor) is used to reduce the switch-on current surge. Another possibility is provided by special capacitor contactors. The capacitors are pre-charged via leading auxiliary switches and resistors.

During an initial measuring phase of the VAR controller, all of the control contacts of the controller are switched on and off individually. The stage currents determined here are stored in the memory. The switching sequence used later is determined on the basis of these values. If one of the capacitor stages fails, this is identified after a brief period as a "zero stage" and no longer included in the control process. To keep the wear and tear of the capacitor contactors as low as possible, the response time of the controller is automatically shortened or prolonged depending on how often the load changes. The controller is equipped with a four-quadrant automatic control. If the active power is fed back (regeneration or recovery) into the mains power grid (over-synchronous operation of asynchronous machines) the controller compensates for the reactive power taken from the power grid.

The desired power factor can be set from cos(φ) = 0.9 capacitive to cos(φ) = 0.8 inductive in steps of 0.01. It is possible to individually select and edit 5 controller profiles. Controller operation is demonstrated based on the following controller characteristics:

If the controller's operating state is located within one of the control bands shown, no switching operations are triggered. However, if the operating state is outside the control band shown, the PQC controller will try to return to the said control band with as few switching operations as possible.

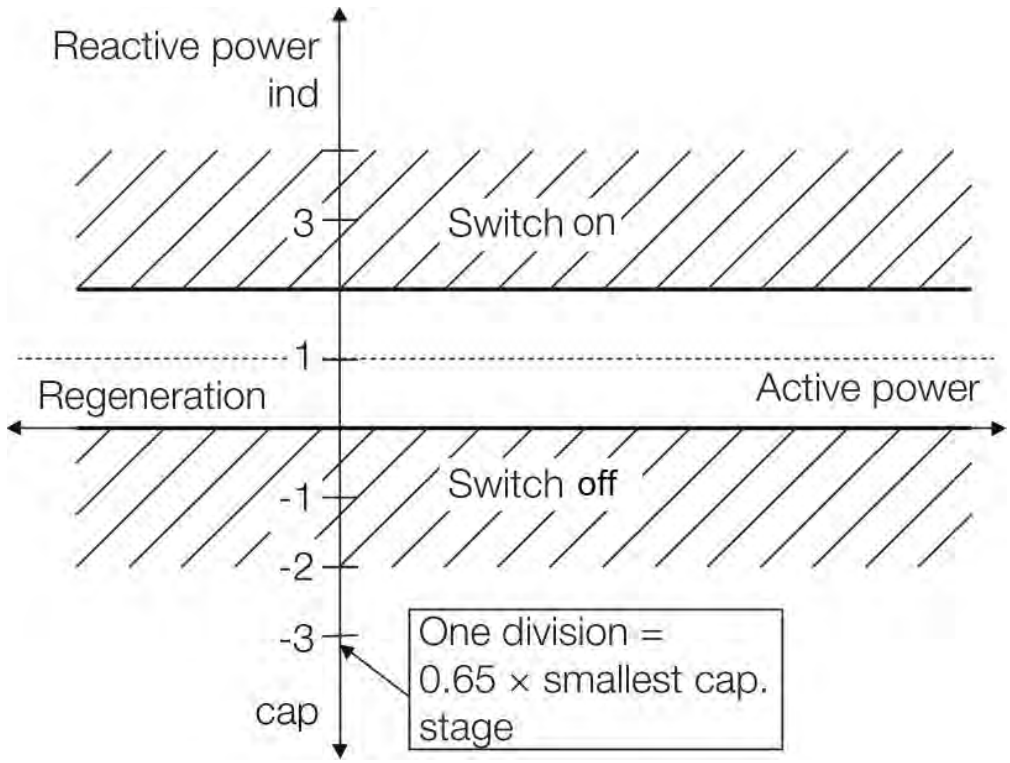

Figure 15:
Control response at $\cos(\varphi)_{setpoint} = 1$; Limitation = OFF; Parallel shift = +1.00

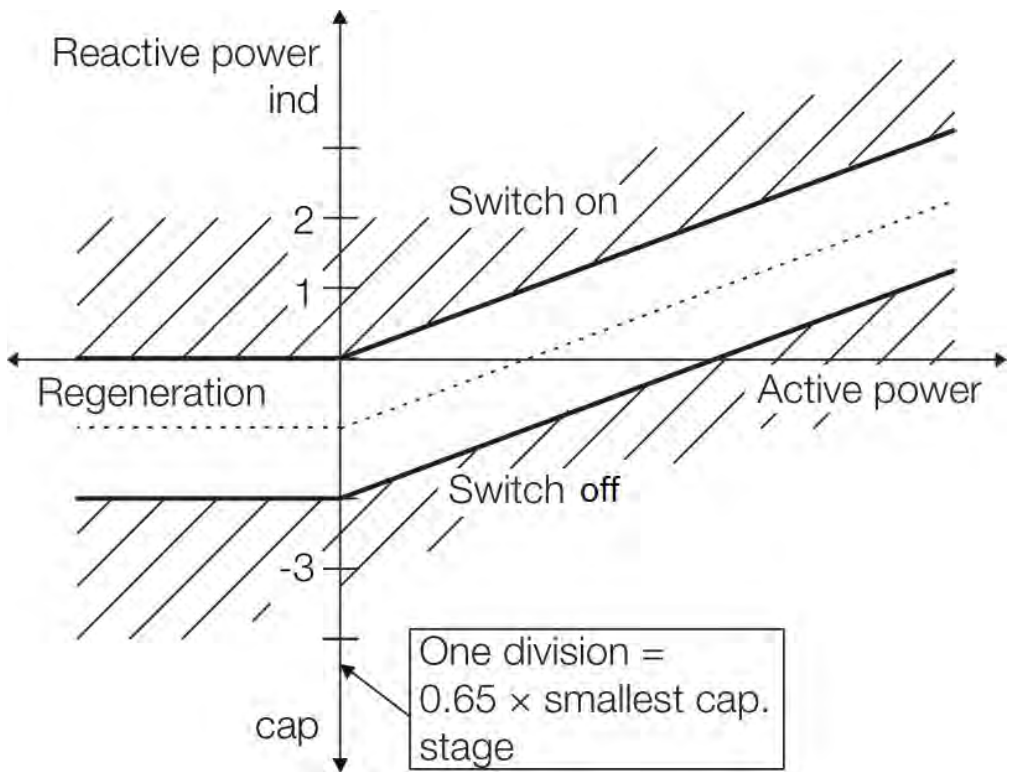

Figure 16:
Control response at $\cos(\varphi)_{setpoint} = 0.92$; Limitation = OFF; Parallel shift = -1.00

Here the response of the controller in energy recovery mode (regeneration) can be detected. The broken off control band (characteristic), is not reflected in the energy recovery mode, but is prolonged into energy recovery mode at the point where it intersects with the reactive power axis (Y-axis). By shifting the control band into the capacitive range, a lagging reactive power can be avoided almost completely during energy recovery mode. Additional setting options can be found in the operating instructions.

2: PQC operation

The following buttons can be found on the VAr controller PQC for operation and configuration:

Table 1:
Description of the buttons on the VAr controller PQC

Button	ESC	↑	↓	⇄	i
Action	**Controller Overview**	**Selection**	**Selection**	**Start Submenu**	**Display of Info Texts**

Operation is carried out here as follows:

Table 2:
Operation of the VAr controller PQC

Icon	Button	Function
ESC	Escape	Go back one level in the system tree.
↑	Up	Go up one increment in the selected value. Shift a selected item upwards.
↓	Down	Go down one increment in the selected value. Shift a selected item downwards.
⇄	Return	Move one level lower in the system tree (e.g. Choose a selected parameter). Selection and confirmation of a selected element (e.g. accepting a value).
i	Info	Textual aid.

Password Protection

The VAr controller PQC is equipped with password protection to protect sensitive menu items from unauthorized access. This can be entered using the ↑ and ↓ buttons. The password can be read out in the menu item "About PQC" under SN (Serial Number)(1260).

Structure Tree

The main menu is invoked by pressing the "ESC" button. The next directory or menu of the structural tree is selected using the arrow keys ↑ and ↓ and opened by pressing Return. Return to the previous selection, i.e. go back one level in the structural tree, by pressing ESC again.

- Main Menu
  - Overview
    - Σ - Summary
    - L - Overview L1
    - Overview capacitor stages
  - Control diagram
  - Manual control
  - Configuration
    - Controller profiles

      Profile 1 ... Profile 5
    - General
      - Capacitor stages
      - Set limits
      - Alarm management
      - Power ratings
      - Extensions
    - Factory settings
  - Info / Status
    - Control infos
    - Corrective power
    - Cap. stages table
    - Cap. stages diagram
    - V-Harmonics diagram
    - I-Harmonics diagram
    - V-Harmonics table
    - I-Harmonics table
    - Switch cycle diagram
    - Man. freq. analysis
  - Initial start-up
  - About PQC

For additional information on the levels and parameters please refer to the operating instructions.

Instruction manual in English

Experiments

"Manual Reactive Power Compensation

Procedure

Case 1: Recording the Characteristic Values of the Asyncronous Machine

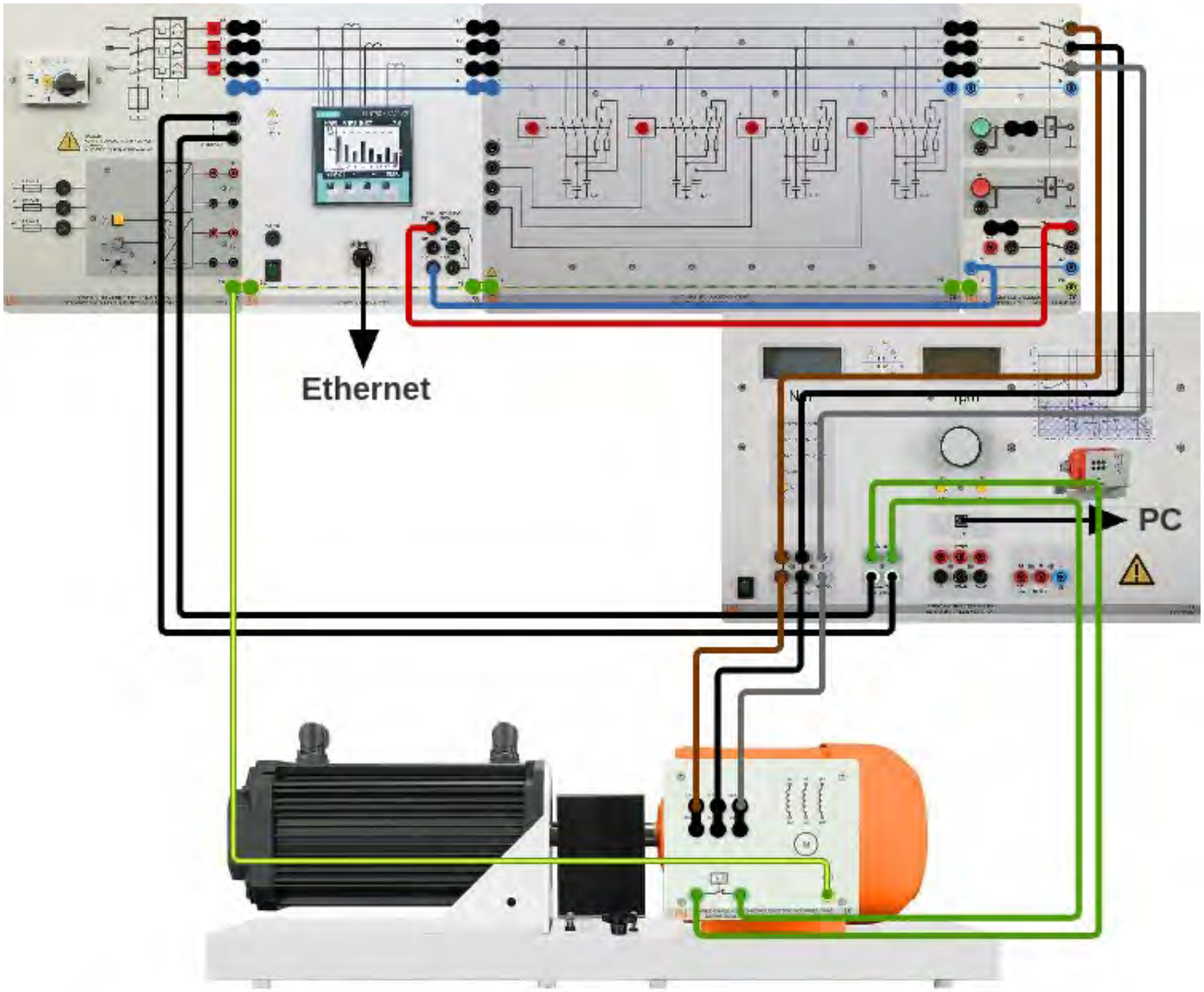

Figure 17:
Recording the Characteristic Values of the Asynchronous Motor

a: No-load Values of the Asynchronous Motor

1. Proceed with set-up circuit from Fig. 17.
2. Save the file EUC3.pvc in a working folder.
3. Open the "SCADA Viewer" program directly in Labsof (top right) and select from the previously saved file.
   - *File → Open...*
   - Navigate to the location of the file and open it.

4. You might have to set the interface and/or address of the equipment in the *device manager (F8)* under or under *Diagnostics → Device Manager.*
   - In this case, keep in mind the chapter "Configuring SCADA for PowerLab"
5. Start (F5) SCADA *Viewer* via or via *Diagnostics → Start Diagnostics.*

A phasor diagram can be opened in the SCADA software using the phasor diagram instrument in the menu Instruments/Multifunction meter CO5127-1S.

6. Turn on the mains voltage via power supply CO3212-5U for electrical machines.
7. Switch on the three-phase motor using the power switch CO3301-5P. (V_L = 08 V)

The asynchronous machine SE2672-5G7 starts when the power switch CO3301-5P is switched on!

8. The electrical and mechanical values of the three-phase motor are determined with the aid of the "Servo machine test stand" control unit. For that reason, take a reading of the values in SCADA in the "Machine Test System" area. Record the variables indicated in Table 3.
9. Switch the power switch CO3301-5P off.

Three-Phase Motor						
I_{RMS}	V_{LL}	P_{MECH}	ΣS	ΣP	ΣQ	cos (φ)

Table 3:

No-Load Values of the Asynchronous Motor

b: Operating Characteristics of the Three-phase Motor

1. Switch the machine test stand to "**Torque Control**" operating mode using the **Mode** button.
2. Switch the power switch CO3301-5P on.

The asynchronous machine SE2672-5G7 starts when the power switch CO3301-5P is switched on!

3. Now enable the machine test stand by pressing the "Run" button.
4. Use the control knob to set the torque to the corresponding values in the table.
   - Always make sure not to exceed the maximum limiting values of the machine noted on the rating plate

5. Subject the three-phase motor to a load using the servo machine test stand. Please use the appropriate instruction manual and the quick chart to operate the equipment.
   - The load is adjusted by the control unit when set to the "Torque Control" operating mode.
   - Maximum values: P_{max} = 2100 W,, I_{max} = 4 A.

6. Record the values found in the Table 4 below. To measure this use the SCADA software and take the readings of the values in the "Machine Test System" area.
7. Switch off the power switch CO3301- 5P.

Three-Phase Motor						
M / Nm	0	0.75	1.5	2.25	3	4
n / min $^{-1}$						
P_{MECH}						
S / VA						
P / W						
Q / Var						
cos (φ)						
I / Amp						

Table 4:

Measurement Values of the Operating Characteristics for the Three-phase Motor

8. Now stop (F5) SCADA *Viewer* via or via *Diagnostics* → *Start Diagnostics.*
9. Now close the SCADA application for PowerLab

The machine test stand can only be initialized with one application, SCADA for PowerLab or ActiveServo. Parallel use is not possible!

10. Open the "ActiveServo" program directly in Labsoft (upper right).
11. Select the "Motor characteristic" window (top right).
12. Operate the machine test stand in the "Speed control" mode under *Settings* → *Mode.*
13. Switch on the power switch CO3301-5P.

The asynchronous machine SE2672-5G7 starts when the power switch CO3301-5P is switched on!

14. Start (F5) the ActiveServo program using or *Settings* → *Switch drive on.*
15. Now brake the asynchronous machine via or under *Settings* → *Output braking slope* up to standstill

All measurement values are detected when the characteristics are recorded. For that reason, the characteristic only needs to be recorded once for the evaluation. In accordance with the following assignment only the diagram has to be adjusted in ActiveServo.

16. Adjust the values and the representation of the graph by double-clicking on the diagram.
17. Plot the characteristics $\cos(\varphi) = f(P)$, $Q = f(P)$ as well as the characteristic $M = f(n)$ of the three-phase motor. Save/record these graphs for your report.
18. Switch off the three-phase motor using the power switch CO3301-5P.
19. Turn off the mains voltage via power supply CO3212-5U for electrical machines.

Case 2: Single Compensation of an Asynchronous Machine

The compensation capacitors are integrated into the switchable capacitor bank. The discharge resistors contained therein are responsible for discharging the capacitors after disconnection from the power grid.

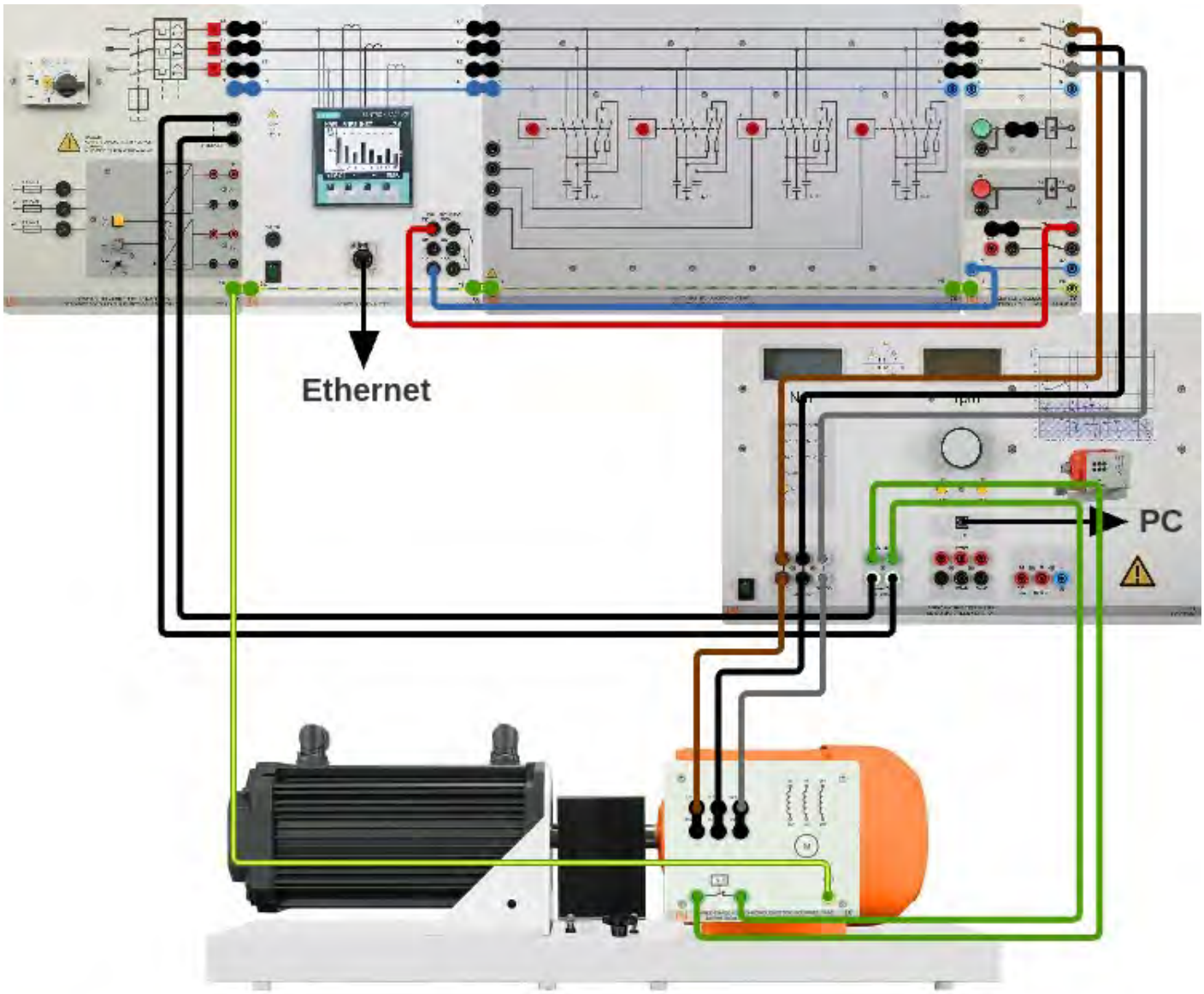

Fig 18:
Single Compensation of an Asynchronous Machine

1. Proceed with set-up circuit from Fig. 18.
2. Save the file EUC3.pvc in a working folder.
3. Open the "SCADA Viewer" program directly in Labsoft (top right) and select from the previously saved file.
   - *File → Open...*
   - Navigate to the location of the file and open it.

5. You might have to set the interface and/or address of the equipment in the *device manager (F8)* under or under *Diagnostics → Device Manager...*

➢ In this case, keep in mind the chapter "Configuring SCADA for PowerLab".

6. Start (F5) SCADA Viewer via or via *Diagnostics → Start Diagnostics.*

A phasor diagram can be opened in the SCADA software using the phasor diagram instrument in the menu Instruments/Multifunction meter CO5127-1S.

7. For various compensation capacitances the measurement values of the mains power grid and the asynchronous machine are recorded and the effect of the capacitances examined.

➢ To set the capacitance value, connect the corresponding terminal of the switchable capacitor bank to the phase L1 using a cable.

8. Turn on the mains voltage via power supply CO3212-5U for electrical machines.
9. Switch on the power switch CO3301-5P.

The asynchronous machine SE2672-5G7 starts when the power switch CO3301-5P is switched on!

10. Record the values found in the Table 5 below. Take the readings in SCADA in the Power Quality Meter PQM area (above) and the "Machine Test System" (below).

Three-Phase Motor									
	C [µF]	0	4	12	20	28	34	42	50
	I [A]								
	ΣS [VA]								
CO5127-1S	ΣP[W]								
PQM	ΣQ [Var]								
	cos(φ)								
	I_{RMS} [A]								
CO3636-6W	ΣS [VA]								
Machine	ΣP[W]								
	ΣQ [Var]								
	cos(φ)								

Table 5:

Measurement Values of Single Compensation of an Asynchronous Machine

12. Switch off the power switch CO3301-5P.
13. Remove the connections to the switchable capacitor bank.
14. Close the SCADA Viewer program.
15. Switch the machine test stand to "**Torque Control**" operating mode using the "**Mode**" button.
16. For various compensation capacitances the measurement values of the mains power grid and the asynchronous machine are recorded and the effect of the capacitances examined:
    - To set the capacitance value, connect the corresponding terminal of the switchable capacitor bank to the phase L1 using a cable.
17. Switch on the power switch CO3301-5P.

The asynchronous machine SE2672-5G7 starts when the power switch CO3301-5P is switched on!

18. Now enable the machine test stand by pressing the "Run" button.
19. Set a torque of **M = 3.3 Nm** using the control knob.
    - Always make sure not to exceed the maximum limiting values of the machine noted on the rating plate!
20. Record the values found in the Table 6 below. Take the readings in SCADA in the Power Quality Meter PQM area (above) and the "Machine Test System" (below).
21. Switch off the power switch CO3301-5P.
22. Turn off the mains voltage via power supply CO3212-5U for electrical machines.

Three-Phase Motor									
	C [µF]	0	4	12	20	28	34	42	50
	I [A]								
	ΣS [VA]								
CO5127-1S	ΣP[W]								
PQM	ΣQ [Var]								
	cos(φ)								
	I_{RMS} [A]								
CO3636-6W	ΣS [VA]								
Machine	ΣP[W]								
	ΣQ [Var]								
	cos(φ)								

Table 6:

Measurement Values of Single Compensation of an Asynchronous Machine with Torque

Case 3: Squirrel-cage Motor as Asynchronous Generator

The asynchronous motor disconnected from the three-phase power mains is operated by the servo machine test stand at synchronous speed ("automatic speed control"). The compensation capacitors bring about a kind of self-excitation of the three-phase machine.

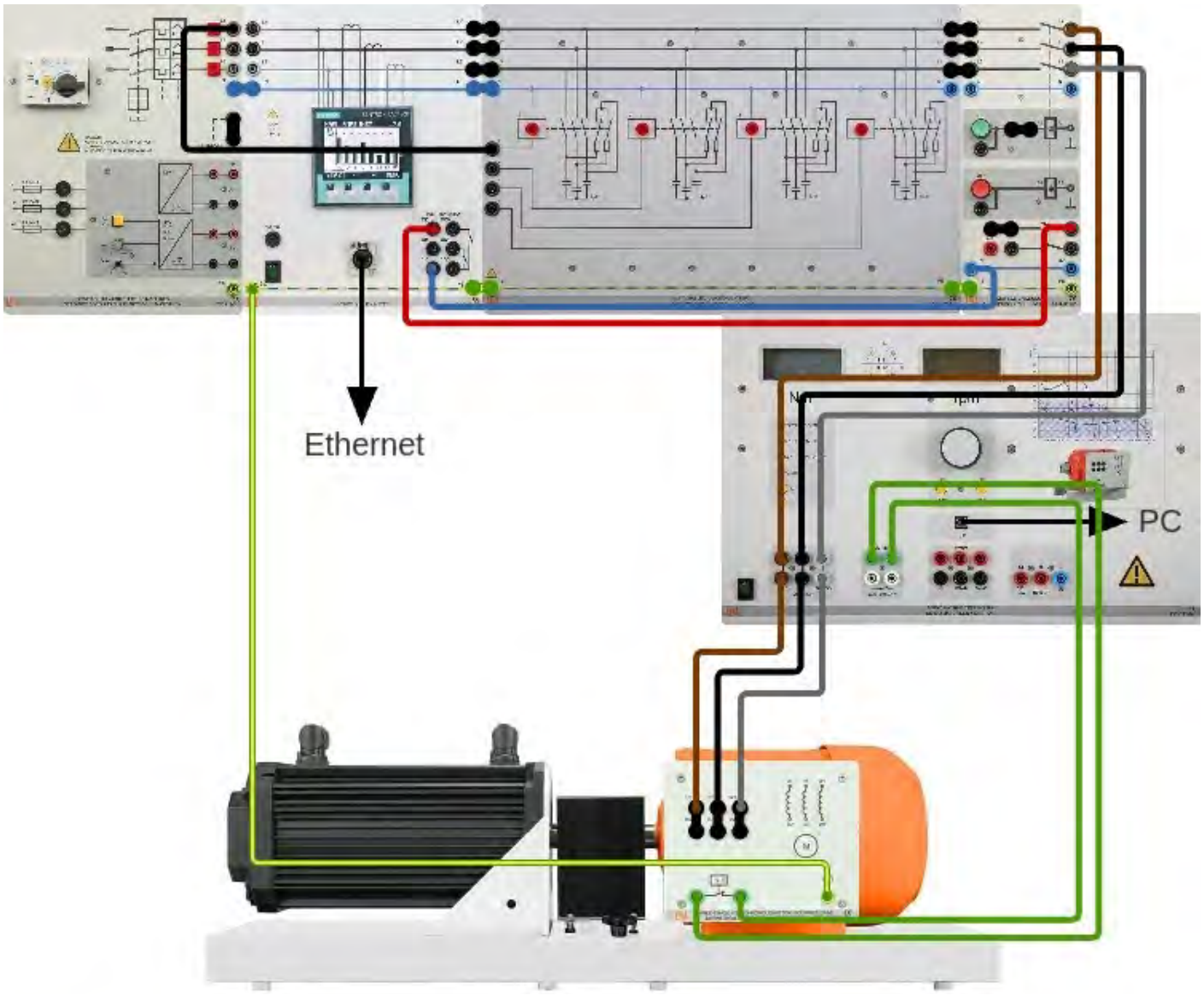

Figure 19:
Squirrel-cage Motor as Asynchronous Generator

In the process the voltage can rise to impermissible high values (V > 208 V)

1. Proceed with set-up circuit from Fig. 19.
2. To set the capacitance value, use a cable to connect the corresponding terminal of the switchable capacitor bank to phase L1 of the power supply for the electrical machines CO3212-5U.

3. When running the servo machine up, monitor the voltage at the Power Quality Meter V < 208 V.
4. Switch on the power switch CO3301-5P.
5. Switch the machine test stand to "**Speed Control**" operating mode using the "**Mode**" button.
6. Now enable the machine test stand by pressing the "Run" button.
7. Set a speed of **n = 3450 rpm** using the control knob.
8. Turn on the power supply for electrical machines CO3201-5U.
9. Measure and record in Table 7 the phase voltage (V_{LL}) at the three-phase machine for various capacitor values.
10. Turn off the power supply for electrical machines CO3201-5U.
11. Switch on the power switch CO3301-5P.

Three-Phase Motor						
C [µF]	4	12	20	28	34	38
V_{LL}						

Table 7:
Measurement Values of Squirrel-cage Motor as Asynchronous Generator

"Automatic Reactive Power Compensation"

Procedure

Case 1: Determining the Reactive Power Demand

1. Proceed with the experiment set-up from Fig. 20.
2. Save the file EUC3.pvc in a working folder.
3. Open the "SCADA Viewer" program directly in Labsoft (top right) and select from the previously saved file.
   - *File → Open...*
   - Navigate to the location of the file and open it.
4. You might have to set the interface and/or address of the equipment in the *device manager (F8)* under or under *Diagnostics → Device Manager...*
   - In this case, keep in mind the chapter "Configuring SCADA for PowerLab"
5. Start (F5) SCADA Viewer via or via *Diagnostics → Start Diagnostics.*

A phasor diagram can be opened in the SCADA software using the *phasor diagram* instrument in the menu Instruments/Multifunction meter CO5127-1S.

6. Turn on the mains voltage via power supply CO3212-5U for electrical machines.
7. Switch on the power switch CO3301-5P.

The asynchronous machine SE2672-5G starts when the power switch CO3301-5P is switched on!

8. Record the variables of Table 8.
9. Switch off the power switch CO3301-5P.
10. Turn off the mains voltage via power supply CO3212-5U for electrical machines.

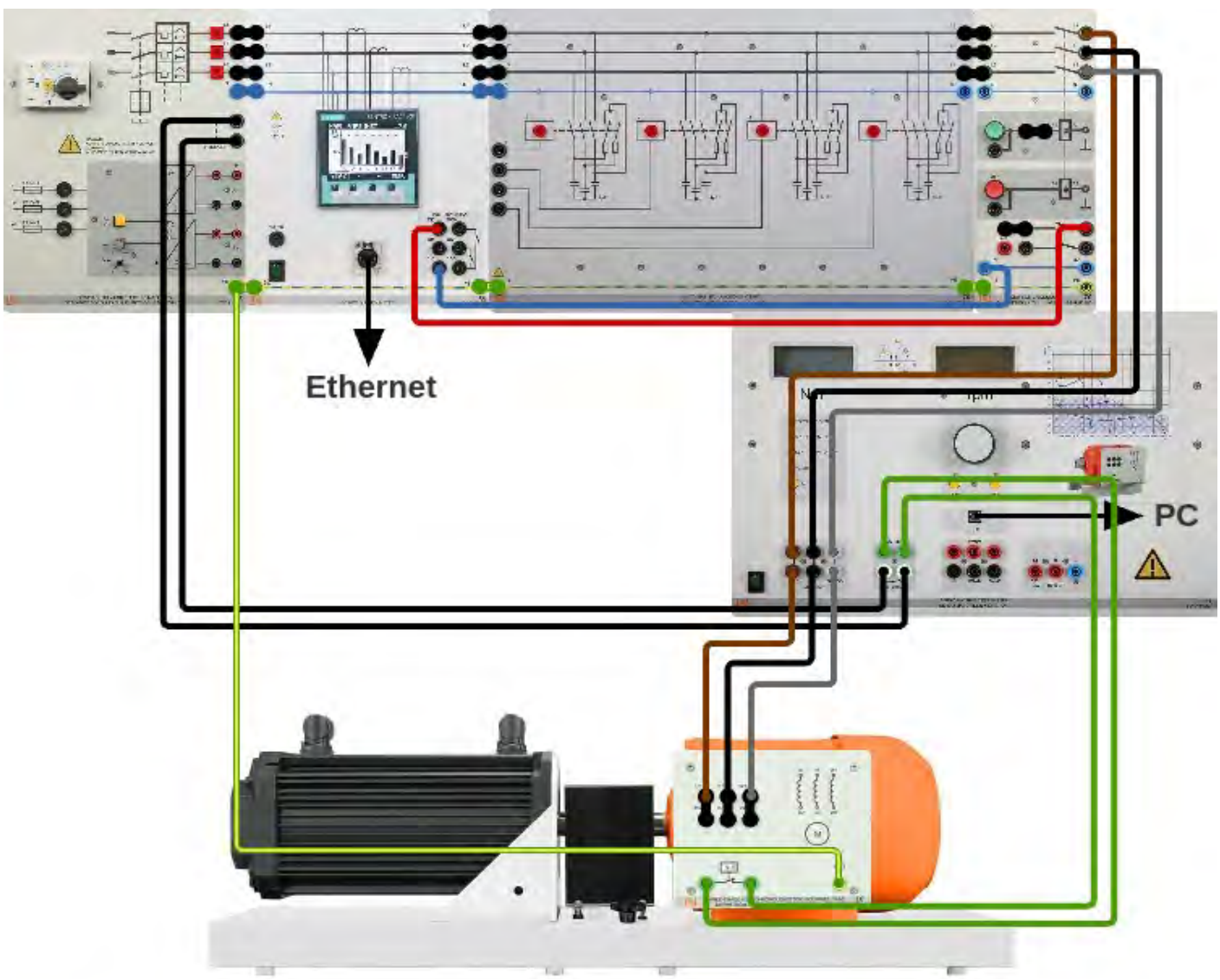

Figure 20:
Determining the Reactive Power Demand

Three-Phase Motor					
V_{LL}	I [A]	ΣP[W]	ΣQ [Var]	cos(φ)	φ

Table 8:
Determining the Reactive Power Demand

Case 2: Automatic Reactive Power Compensation

When the operating voltage is applied for the first time, the VAr controller undergoes commissioning.

Please consult the chapter titled "PQC operation"

- Enter the following parameters:
  - *Language:* ***English***
    - There are additional languages available, the parameters and menu navigation are always specified in English
  - *Voltage transformer:* ***1***
  - *Current transformer:* ***1***
  - *Detection:* ***Stage + Connect***
- Carry out automatic terminal recognition by pressing *Continue*

The automatic terminal recognition can malfunction if the power supply system is extremely unstable. Subject the power supply system to a load by connecting the asynchronous machine and repeat the process.

The VAr controller checks the stored values at certain regular time intervals. The controller detects if a capacitor stage has failed and no longer includes it in the standard control process. However, these "stages without power" (zero stages) are sampled regularly to check their power levels. A re-equipping of capacitor stages and the replacement of defective fuses is thus automatically detected and integrated into the control process.

However, the initial measurement process should be initiated manually after such (maintenance) work is carried out by going to ***Main Menu → Initial start-up.***

The following basic settings have to be carried out on the VAr controller PQC.

Controller Profile

The VAr controller is equipped with 5 profiles which can be allocated as standard profiles in the following scenarios:

- Profile 1: Ideal characteristic for all consumer power systems in which an inductive cos(φ) is required..
- Profile 2: Suitable for consumer power systems in which an average cos(φ) = 1 should be achieved.
- Profile 3: Suitable for consumer power systems in which cos(φ) should approach 1 while also avoiding any overcompensation.
- Profile 4: Suitable for consumer power systems as described in profile 1 with inherent power generation (e.g. CHP) with permanent or frequent energy recovery.
- Profile 5: Suitable for generator power systems like hydroelectric or wind power systems in which a capacitive cos(φ) is required.

For additional information on the profiles and their various parameters, please refer to the operating instructions.

Use controller profile 2 by selecting ***Configuration → Controller profiles → Profile 2*** and carry out the following settings:

Profile 2	
Cos φ nom:	1.0
Parallel shift:	0
Limitation:	off
Switching delay:	5 s
Phase:	L1
Active ☑	Save ☑

Table 9:

Parameters of Controller Profile 2

Capacitor Stages

Use the following parameters for the capacitor stages by selecting ***Main Menu → Configuration → General → Capacitor stages***

Capacitor stages	
Switching rotation:	ON
Discharge time:	5 s
Fixed stages:	0
Choke factor:	0.00%
Zero stage limit:	80%
Polarity relay:	OFF
Control band alarm:	OFF
Stage lost detection:	ON

Table 10:
Settings of the Capacitor Stages

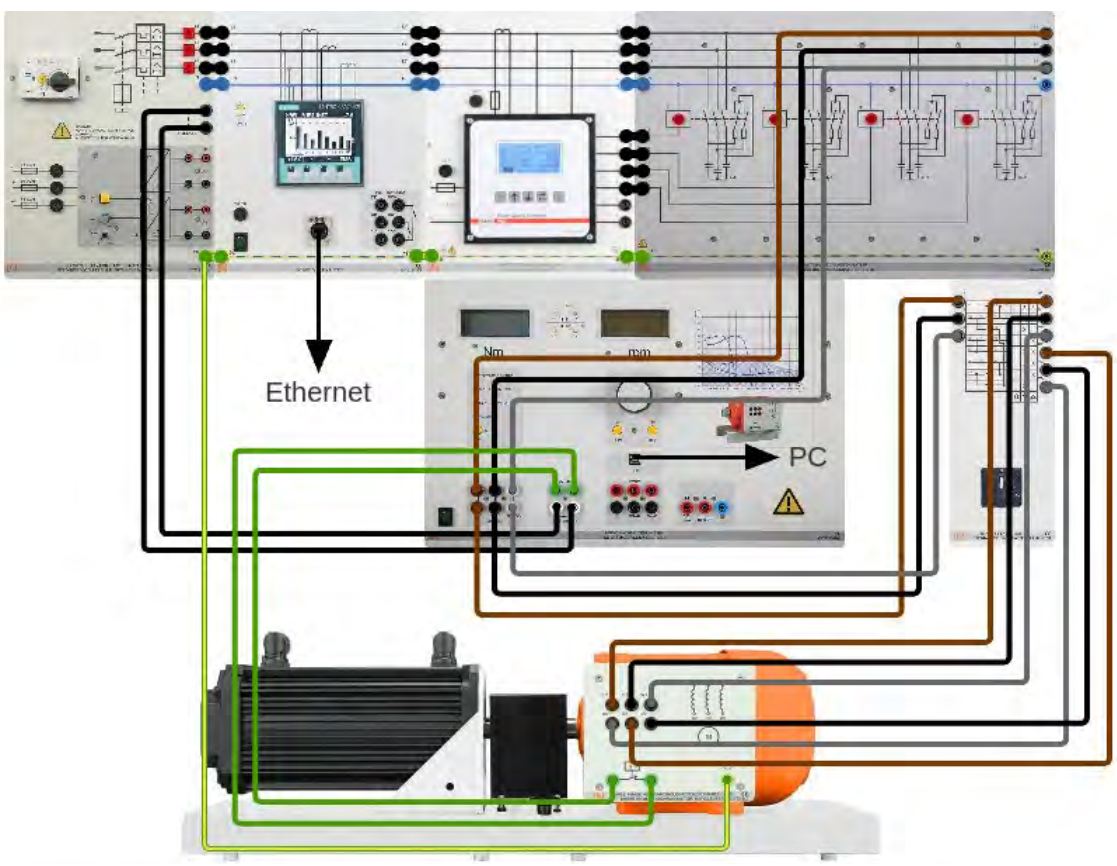

Figure 21:
Experiment set-up for "Automatic Reactive Power Compensation"

1. Proceed with the experiment set-up from Fig. 21.
2. Turn on the mains voltage via power supply CO3212-5U for electrical machines.
3. Carry out automatic terminal detection via ***Main Menu → Initial start-up.***
4. Use controller profile 2 by selecting ***Configuration → Controller profiles → Profile 2*** and carry out the following settings:

Profile 2	
Cos φ nom:	0.95 ind
Parallel shift:	0
Limitation:	off
Switching delay:	5 s
Phase:	L1
Active ☑	Save ☑

Table 11:
Parameters of Controller Profile 2

5. Save the file EUC3.pvc in a working folder.
6. Open the "SCADA Viewer" program directly in Labsoft (top right) and select from the previously saved file.
   - *File → Open...*
   - Navigate to the location of the file and open it.

7. You might have to set the interface and/or address of the equipment in the *device manager (F8)* under or under *Diagnostics → Device Manager...*
   - In this case, refer to chapter "Configuring SCADA for PowerLab"
8. Start (F5) SCADA *Viewer* via or via *Diagnostics → Start Diagnostics*

A phasor diagram can be opened in the SCADA software using the *phasor diagram* instrument in the menu Instruments/Multifunction meter CO5127-1S.

9. At first switch the star-delta switch CO3212-2D to star configuration Y.
10. After nominal speed is reached, switch the motor to delta configuration Δ.

The asynchronous machine SE2672-5G7 starts when the star-delta switch CO3212-2D is switched on!

11. Record the values of Table 12 using SCADA. During this process the motor is initially operated without any load (M = 0).
12. Complete Table 13. Which stages were switched?
13. Switch off the star-delta switch CO3212-2D.

I_{RMS_Motor}	$I_{\_mains}$	ΣP_{mains}	$\cos\varphi_{mains}$	ΣQ_{mains}

Table 12:
Automatic Reactive Power Compensation without Load

Stage 1	Stage 2	Stage 3	Stage 4

Table 13:
Stages Conditions without Load

14. Close the SCADA Viewer program.
15. Switch the machine test stand to "**Torque Control**" operating mode using the "**Mode**" button.
16. At first switch the star-delta switch CO3212-2D to star configuration Y.
17. After nominal speed is reached, switch the motor to delta configuration Δ.

The asynchronous machine SE2672-5G7 starts when the star-delta switch CO3212-2D is switched on!

18. Now enable the machine test stand by pressing the "Run" button.
19. Set a torque of M = **3.3 Nm** using the control knob.
    - Always make sure not to exceed the maximum limiting values of the machine noted on the rating plate!

20. Complete Table 14. Which stages were switched?
22. Disable the machine test stand and turn off the star-delta switch CO3212-2D.
23. Complete Table 15. Which stages were switched?

Stage 1	Stage 2	Stage 3	Stage 4

Table 14:
Stages Conditions with Load (Torque)

No Change	All Stages & Caps On	All Stages & Caps Off

Table 15:
Stages Conditions without Power

Report Questions

1. From the following power rating plate data of the motor and with compensation to cos φ_2 = 0.95 inductive. Calculate the capacitors for reactive power compensation in delta (C_Δ) and star (C_Y) configuration?

   Motor: P_N = 1 kW, cos φ_{Mot} = 0.83, V_Δ = 208 V, I = 3.8 A, f = 60 Hz, n = 3480 rpm

2. Using data from Table 3 (No-Load Values) and with capacitor current equals 90% of the no-load current. Calculate the capacitors for reactive power compensation in delta (C_Δ) and star (C_Y) configuration?
3. Plot Q = f(P) and cos (φ) = f(P) from values of Table 4 in the same graph. How does the reactive power Q and cos (φ) respond to increasing load?
4. Show the plot characteristics cos(φ) = f(P), Q = f(P) as well as the characteristic M = f(n) of the three-phase motor in the brake test. Step 17 from operating characteristics of the three-phase motor.
5. Plot Q = f(C) and cos (φ) = f(C) for feed lines (PQM) and machine from values of Table 5 in the same graph.
6. Plot Q = f(C) and cos (φ) = f(C) for feed lines (PQM) and machine from values of Table 6 in the same graph. What value does the capacitor have that generates a compensation of approx cos(φ)=0.95 at nominal load?
7. Using data values from Table 6. How does the cos(φ) and current in the feed lines change when the capacitance is increased to C = 20 μF and C = 50 μF?
8. Which variable are not affected by the capacitors in Table 6? What happens to the motor's active power?
9. Which measures prevent the asynchronous voltages from increasing beyond nominal voltage when the squirrel-cage motor is used as asynchronous generator?

10. To what extent does the reactive power consumption of the asynchronous motor depend on the load of the machine?
11. What is the required reactive power (Q_{Ctot}) to achieve compensation of $\cos(\varphi) = 1$? (Case 1. Automatic reactive power compensation.)
12. Calculate the required phase capacitance (Q_{Ctot}) using data values from Table 8.
13. Calculate the stage power levels (Q_C) for capacitor sizes: 4 µF, 8 µF, 16 µF, and 30 µF.

References

Jörg Ludwig, *Energy Management*, Lucas-Nülle GmbH, 2019.