"Three-phase Multifunction Machines"

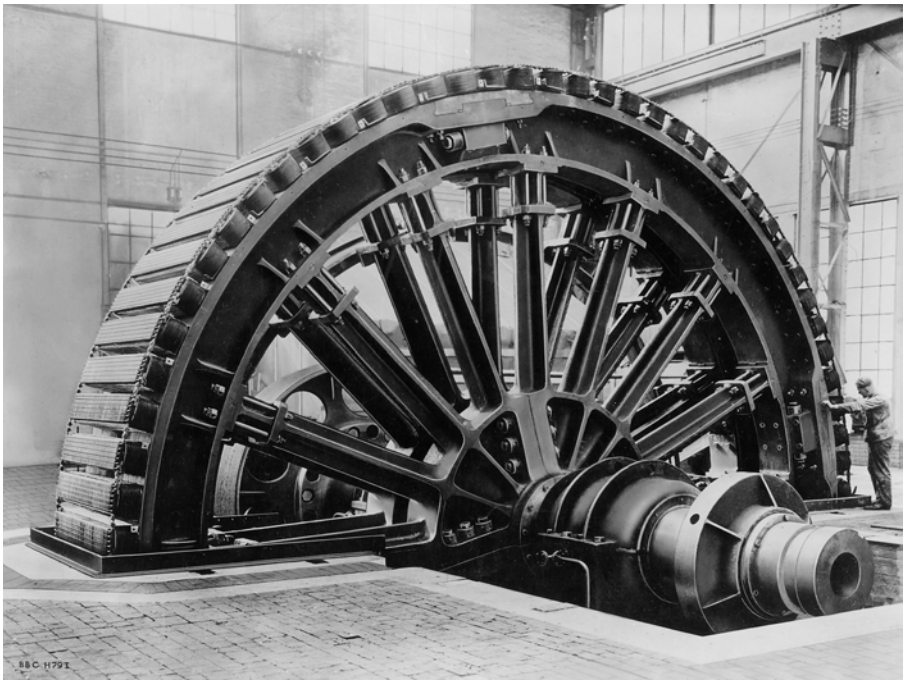

Experiment Objectives

We will be working on acquiring practical know-how and experience working with the three-phase multifunction machine. Investigations of the generator, asynchronous, and synchronous motor are at the focal point of our work and provide us with insight into the machine's function, operation and performance response.

- Motor and generator operating modes.
- Nominal data and rating plate.
- Asynchronous and synchronous operation.
- Phasen-shifter operation (synchronous motor).
- V-characteristics.
- Measurement of the phase-to-phase and line-to-line variables.
- Rotation reversal.
- Load characteristics for the asynchronous and synchronous motor as well as synchronous generator.
- Phase-shifter operation.
- Mains synchronisation.
- Power measurement and synchronised generator

Equipment

Equipment	Part Number	Description
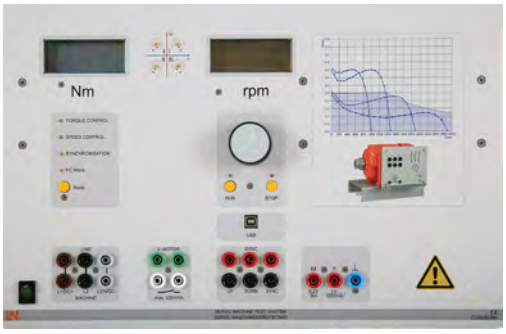	**CO3636-6V7**	Servo-Machine Test System for 300 W Machines Manual
	**SE2662-3W7**	Three-Phase Multifunction Machine 300 W

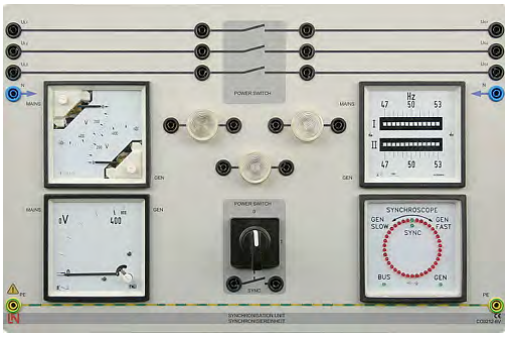	**CO3212-6V2**	Synchronization Unit Manual
	**CO3212-1P**	Motor Protection Switch 3 Pole 0.4 - 0.63 A
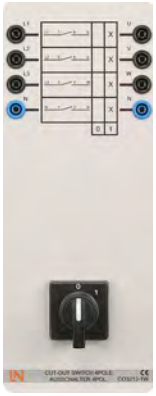	**CO3212-1W**	Cut Out Switch 4 Pole
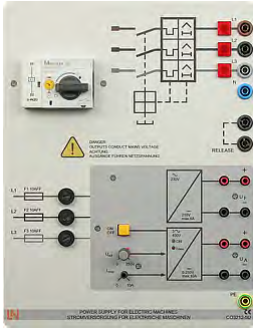	**CO3212-5U7**	Universal Power Supply for DC and Three-phase Current Manual
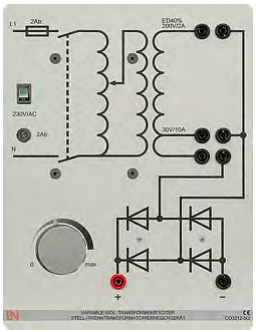	**CO3212-5Q7**	Variable Isolation Transformer/ Exciter 0 - 180V

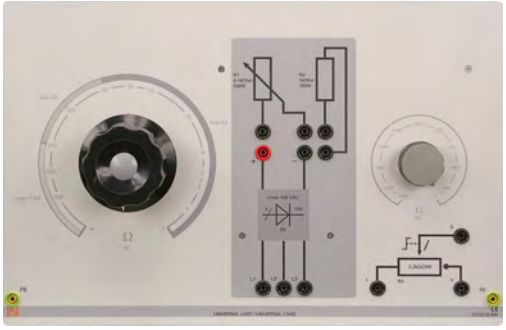	**CO3212-6W**	Universal Load for 300 W Machines
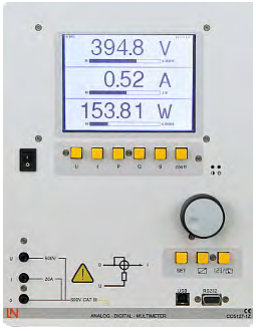	**CO5127-1Z8**	Analog/Digital Multimeter, Wattmeter + Power Factor Meter inc. software Manual

CO3212-5U*

Mains power supply for DC, AC and three-phase machines and for synchronous machine excitation. The power supply unit is especially designed for the operation with electrical machines.

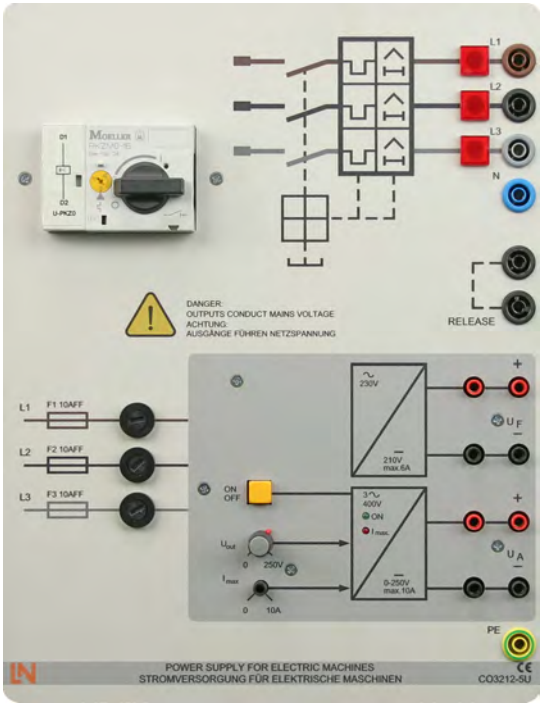

Specification:

- Three-phase: L1, L2, L3, N accessible via 4 mm safety sockets.
- DC current: 0...240 V DC variable, constant and electronically protected against overload and short-circuit.
- Output current: 3...10 A (adjustable current limitation setting).
- Second DC voltage 210 V DC, 6 A fixed.

Protective devices:

- Motor protection CB switch, adjustable from 6.3 A...16 A.
- Undervoltage trip.
- Emergency OFF switch.
- Mains connection:
  - **CO3212-5U:** 3 x 230/400V, 50 Hz
  - **CO3212-5U7:** 3 x 120/208V, 60 Hz
- Dimensions: 11.7 x 9 x 5.5 in (HxWxD)

The manufacturer's instructions can be viewed here: Manufacturer's instructions.

CO3212-5Q7

Variable/isolation transformer exciter unit is designed for field excitation of DC, synchronous and multifunction machines.

CO3212-5Q

- Output voltage: 0...230 V, 2 A AC/DC
  0...30 V, 10 A AC/DC
- Dimensions: 11.7 x 9 x 4.9 in (H x W x D)
- Weight: 12 kg

CO3212-5Q7

- Output voltage: 0...180 V, 2 A AC/DC
  0...30 V, 10 A AC/DC
- Dimensions: 11.7 x 9 x 4.0 in (H x W x D)
- Weight: 12 kg.

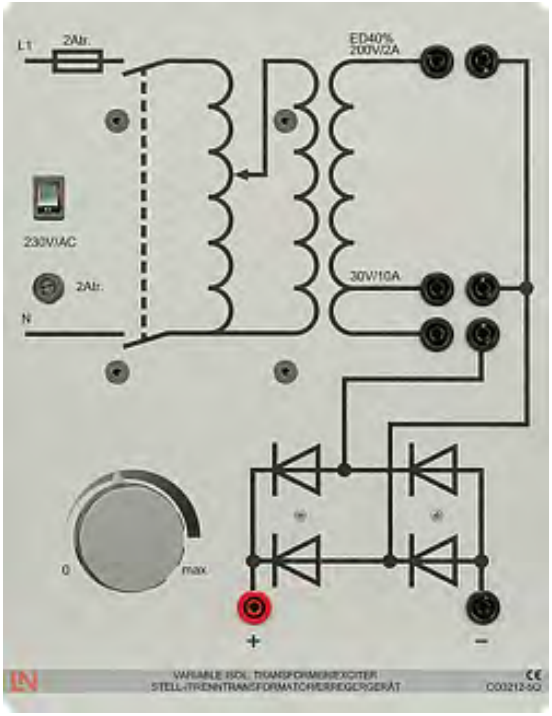

CO5127-1Z*

CO5127-1Z (*CO5127-1Z8 → 60 Hz) "Analog/digital multimeter" experiment panel:

Technical data:

- Measurement variables:
  - Voltage Current
  - Active power
  - Apparent power
  - Reactive power
  - Cosine φ
- Protection class II
- Interfaces:
  - USB

The manufacturer's instruction sheet can be found at manufacturer's instruction sheet.

CO3636-6V7 / CO2663-6V7

The servo-machine test bench is a complete testing system for examining electrical machines and drives. It consists of a digital controller, a brake and the ActiveServo software. The system combines state-of-the-art technology with ease of operation.The system also allows manual and automated synchronization to be carried out.

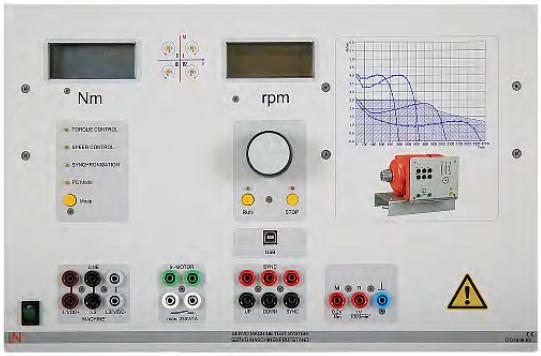

The controller has the following features:

- Dynamic and static four-quadrant operation.
- 10 selectable operating modes/machine models (torque control, speed control, flywheel, lifting drive, roller/calander, fan, compressor, winding gear, arbitrarily defined time-dependent load, manual and automated network synchronization).
- Integrated galvanically isolated amplifier for voltage and current measurement.
- Speed and torque displays.
- Four-quadrant monitor.
- USB interface.
- Thermal monitoring of the machine under test.
- Testing for the presence of a shaft cover.
- Connection voltage: 208 V, 60 Hz.
- Maximum power output: 4 kVA.
- Dimensions: 11.7 x 18.1 x 16.5 in (HxWxD).
- Weight: 13.3 kg

The brake is self-cooled asynchronous servo-brake with resolver.

The motor and sensor leads are connected via polarity-safe plugs. The machine has thermal monitoring and, in conjunction with the controller, it constitutes a driving and braking system that is free of drift and requires no calibration.

- Maximum speed: 4000 rpm.
- Maximum torque: 10 Nm.
- Temperature monitoring: continuous temperature sensor (KTY).
- Resolver resolution: 65536 pulses/revolution.
- Dimensions: 10.8 x 8.3 x 8.3 in (WxHxD).
- Weight: 6 kg.

ActiveServo is a program for recording characteristics of machines and for determining dynamic and static operating points. It emulates seven different loads (flywheel, pump, calander, lifting drive, compressor, winding gear, arbitrarily configurable time-dependent load) for which the parameters can be individually configured.

Features:

- Measurement, calculation and display of mechanical and electrical variables.
- (Speed, torque, mechanical power output, current, voltage, active, apparent and reactive power, efficiency, power factor).
- Simultaneous display of measured and calculated values (e.g. instant display of efficiency).
- Measurement of voltage and current (including RMS values even for non-sinusoidal waveforms).
- Speed or torque-controlled operation.
- Recording of variables over time.
- Programming of limiting values of speed or torque to prevent inappropriate loading of the machine under test.
- Operation in all four quadrants (display of generated torque).
- Arbitrarily defined ramp functions for PC-controlled load experiments.
- Display of characteristics from several experiments to better illustrate the effect of parameter changes.
- Export of graphics and measurements
- 32-bit version for Windows

Start-up

Before start-up, familiarize yourself with the manufacturer's instructions, which can be found here: Manufacturer's instructions.

Experiments

Asynchronous Motor (Three-phase Multifunction Machine)

Procedure:

Definition of rotation direction

If you look at the drive shaft end of the machine from the perspective of the working machine (in our case the brake), the rotating direction is positive when it is clockwise. If the motor has two workable shaft ends, then it is the shaft end opposite the cooling vents, collector or slip-rings that is the shaft end which defines the rotation direction.

1. Identify the terminals of the motor.
2. Register the nominal data of the motor in Table 1 using the rating plate.
3. Connect the circuit in accordance with the diagram of Figure 1.
4. Then switch on the power supply for the stator winding by setting the cut out switch CO3212-1W in position 1.
5. Measure and record the rotor voltage V_{rotor} (standstill voltaje) in Table 1.
6. Switch off the motor by setting the cut out switch CO3212-1W in position 0 and modify the circuit in accordance with the circuit diagram of Figure 3.
7. Switch on the power supply for the stator winding by setting the cut out switch CO3212-1W in position 1.
8. Identify the motor's rotation direction (CW/CCW) and record in Table 1.
9. Set the cut out switch CO3212-1W in position 0 to turn the motor off and modify the circuit in accordance with the circuit diagram of Figure 2.
10. Switch on the cut out switch CO3212-1W to position 1. Identify the motor's rotation direction (CW/CCW) and record in Table 1.
11. Switch off the motor by setting the cut out switch CO3212-1W in position 0.

Three- Phase Multifunction Machine											
Rat Pow	V_{LL} Y	I_{LL} Y	cos φ_{syn}	cos φ_{asyn}	Syn Speed	Freq	V_{exc} DC	I_{exc} DC	V_{rotor}	Step 8	Step 10
W	V	A	#	#	rpm	Hz	V	A	V	Rot.	Rot.

Table 1:

Nominal Data of the Three-phase Multifunction Machine

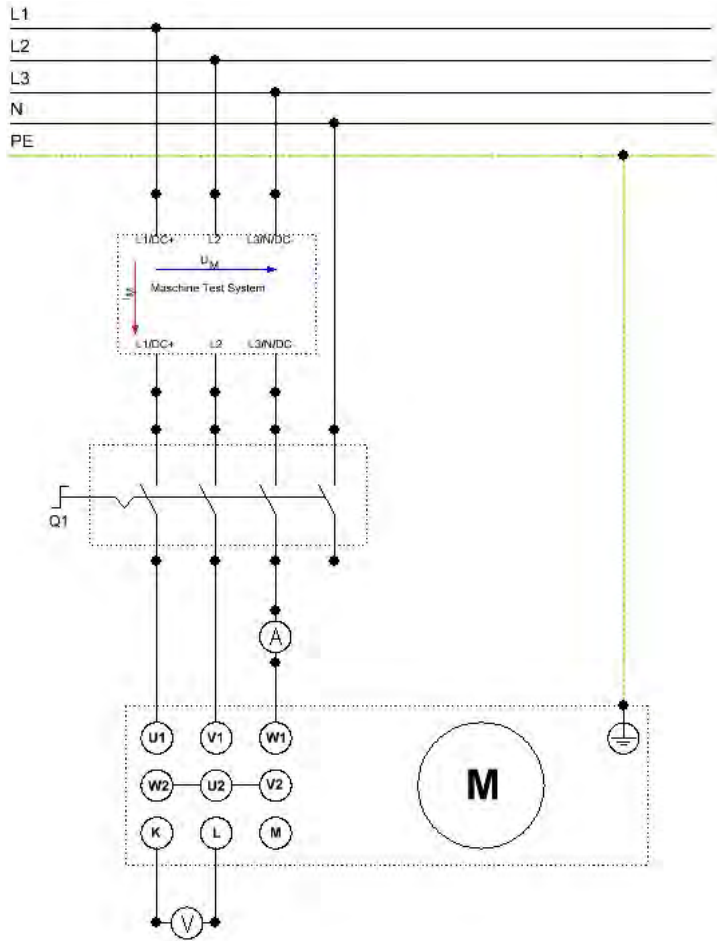

Circuit Diagram

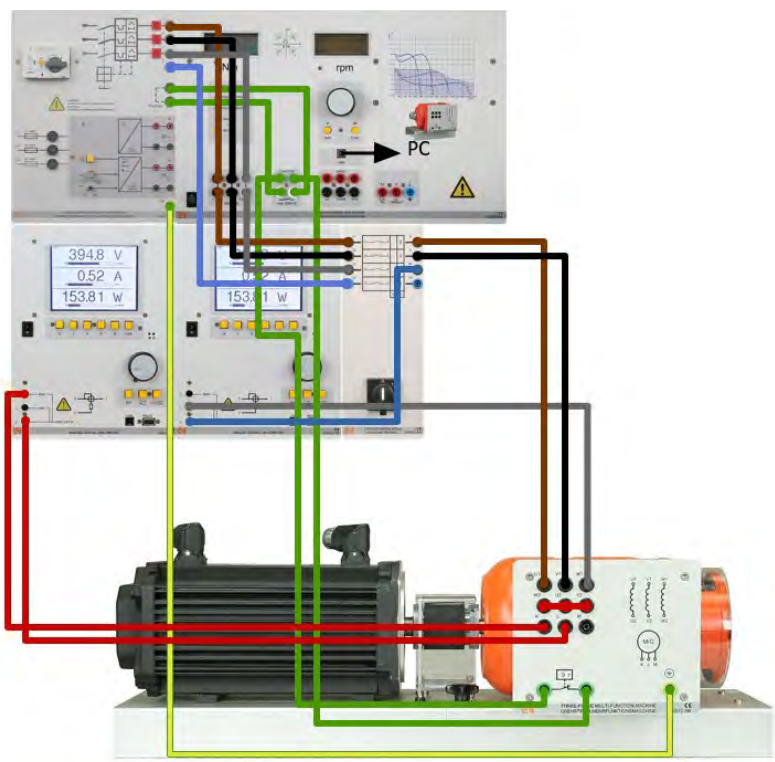

Assembly Diagram

Figure 1:
Rotor Standstill Voltage

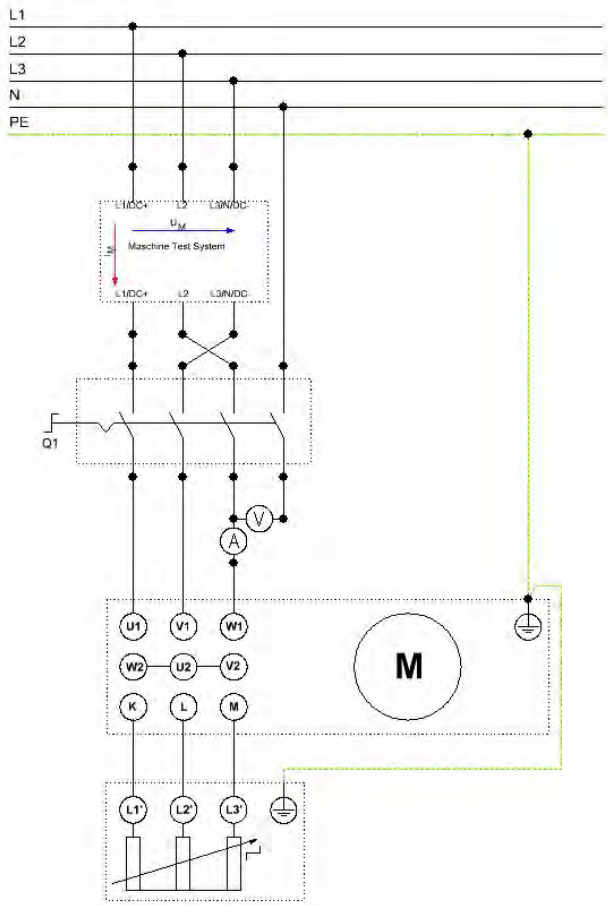

Figure 2:
"Rotation Reversal" Circuit Diagram.

12. Set up the circuits in accordance with the circuit and assembly diagrams of Figure 3.
13. Switch on the servo machine test system as well, this does not subject the motor to any load.
14. Adjust the servo machine test system: Mode "Torque Control" and starter: 0 Ohm.
15. Set the cut out switch CO3212-1W in position 1 putting the motor into operation and observe it.
16. Press RUN on the servo machine test system and brake the motor using the torque values specified in the Table 2.
17. Measure the motor current and speed for each torque setting and enter the measured values into the table 2.
18. Switch off the motor by setting the cut out switch CO3212-1W in position 0.

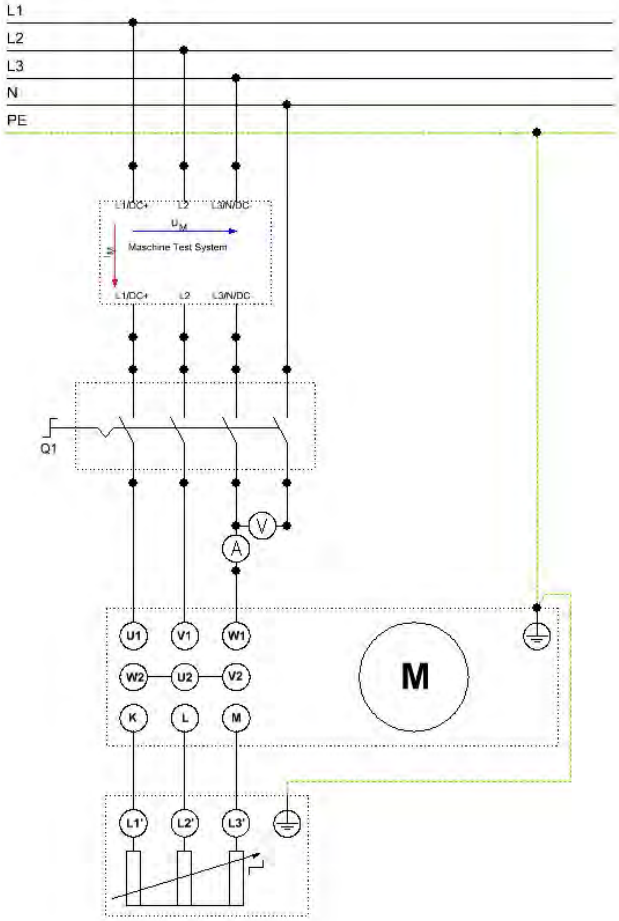

Circuit Diagram

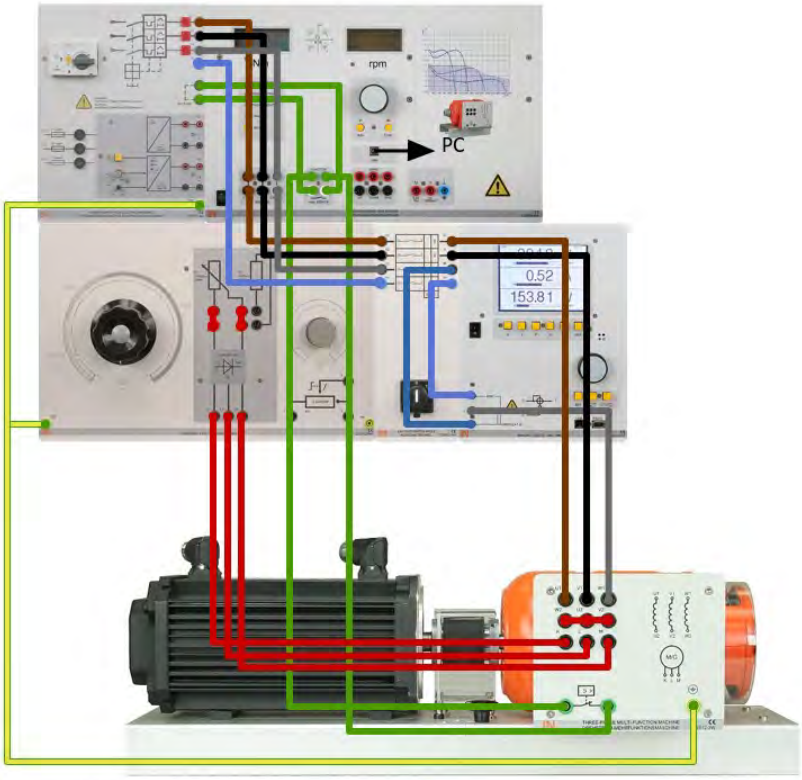

Assembly Diagram

Figure 3: No-Load Operation

M/Nm	0.2	0.4	0.6	0.8	1	1.2	1.4
n/rpm							
I/A							

Table 2:
No-Load Operation

17. Adjust the servo machine test system: Mode "Torque Control" and starter: 0 Ohm.
18. Set the cut out switch CO3212-1W in position 1 putting the motor into operation.
19. Adjust a constant torque level to the brake of 1.5 Nm as indicated in Table 3.
20. Set the starter value Ra = 0 Ohm using the universal load CO3212-6W knob.
21. Measure the motor current and speed and enter the measured values into the table 3.
22. Repeat steps 20 and 21 for Ra values of 2, 5, 10, and 20 Ohms.
23. Set the cut out switch CO3212-1W in position 0 to turn the motor off.

M=	Ra/Ohm	0	2	5	10	20
1.5Nm	n/rpm					
(const.)	I/A					

Table 3:
Constant Load Operation

24. Start the "ActiveServo" software. The servo machine test system will turn automatically to "PC Mode".
25. The motor is to be braked in 20 steps down to standstill. Adjust the following settings in the software as shown in Table 4.
26. The respective load characteristics of the asynchronous machine are to be recorded for a total of four starter resistance values (0, 2, 5, 10 Ω).
27. Begin with the lowest starter resistance value (Ra = 0 Ohm). All of the load characteristics are recorded in one graph.
28. Set the cut out switch CO3212-1W in position 1 to start the motor.
29. Click on Start/Stop button or press F5.
30. Record the first load characteristic by pressing the symbol or F6 and label the curve with corresponding Ra value.
31. Change starter resistance to its next value and record the next load characteristic repeating steps 29 and 30.
32. The following parameters are to be recorded: Torque $M_{(n)}$.
33. Label and scale the graph as in Table 5.
34. Save/record the graph created after successfully completing the measurement for your report.

35. Save the settings used in the "ActiveServo" software for next steps under the file name "eem5_loadcharacteristic".
36. Set the cut out switch CO3212-1W in position 0 to turn the motor off.

ActiveServo Settings:			
Diagram: Motor characteristics			
Settings	Mode	Speed control	
	Presets...	Machine	Synchronous speed [rpm]: 1800 other fields are not required for measuring (motor data can be filled in)
		Circuit	Phase and line variables (3 phase)
		Ranges	Voltage: 350 V Current 25 A
		Slope	Calculate Start: Actual speed End: 0 RPM Steps: 20 Delay after new speed: 200 ms
		Options	don't change default values

Table 4:
Software Setting

	Minimum	**Maximum**	**Division**
X Axis			
η in rpm	0	1800	200
Y Axis			
M /Nm	0	3	0.2

Table 5:
Label and Scale Setting

37. Start the "ActiveServo" software. The servo machine test system will turn automatically to "PC Mode".
38. Open the file "eem5_loadcharateristic".
39. Select the diagram "Load simulation"

40. Under the menu "Settings" set the load machine: "Pump / Ventilator".
41. Under the menu "View" →"Measured values" mark down all of the mechanical and electrical variables with the exception of the slip.
42. The following parameters are to be recorded during this measurement: Torque $M_{(n)}$.
43. Set the cut out switch CO3212-1W in position 1 to turn the motor on and adjust the starter to Ra = 0 Ohm.
44. Start the measurement and slowly increase the load constant "I" until the power level P_2 (mechanical power) shown in the parameter dialog corresponds approximately to 200 W and then save this first "operating point" (F8 or).
45. Without changing the load constant "I" vary the starter value according to the specified values(0, 2, 5, 10 Ω), waiting a moment each time and then saving the additional operating points (F8 or).
46. Right click on one of the saved working points and select "Show load characteristic".
47. Save/record the created graph after successful measurement for your report.
48. Save the settings under the filename "eem5_Pump-Ventilator".

Additional information pertaining to the load machine "Pump/ Ventilator" and the definition of load constants "I" can be found in the online documentation of the "ActiveServo" software

49. Set the cut out switch CO3212-1W in position 0 to turn the motor off.
50. Switch the servo machine test system off.

Synchronous Motor (Three-phase Multifunction Machine)

Procedure:

1. Set up the circuits according to the circuit and assembly diagrams of Figure 4.
2. Switch on the servo machine test system and set the "Synchronisation / Speed Control" mode.

More detailed information on the servo machine test system can be found in the corresponding online documentation

Make sure the ammeter/voltmeter are connected correctly

The motor has a very low startup torque. This is not sufficient to start the motor coupled to the servo-machine test system. Therefore, the motor will be accelerated to a speed of 1800 rpm using the servo machine test system.

3. Set the exciter voltage to 0 V.
4. Press the RUN button at the servo machine test system and set a speed of 1800 rpm
5. Connect the motor to the grid via the CO3212-1W switch (switch on).
6. Set the exciter current to 1 A as specified in the Table 6.
7. Press the STOP button at the servo machine test system and change the mode to "Torque control".
8. Press the RUN button again and brake the motor using the torque levels for corresponding exciter current as indicated in the Table 6.
9. Measure the motor current "I" and the speed "n" and enter the measured values into the Table 6.

As soon as the motor loses "synchronization", it should be immediately switched off using the cut off switch CO3212-1W, and all measured values for the motor current are to be ignored from this point on. Enter the torque value at which the motor loses "synchronization".

10. After the motor loses synchronization repeat the steps 2 - 9 for the next exciting current (2 and 3 A) with corresponding torque levels.
11. Switch off the switch CO3212-1W.
12. Switch off the servo machine test system.

Iexc.	M/Nm	0.1	0.2	0.3	0.4	0.5
1.0 A	n/rpm					
	I/A					
Iexc.	M/Nm	0.2	0.5	0.8	1	1.2
2.0 A	n/rpm					
	I/A					
Iexc.	M/Nm	0.5	1	1.2	1.5	2
3.0 A	n/rpm					
	I/A					

Table 6:
Load Characteristics at Varying Excitation

13. Repeat steps 2 to 7.
14. Press the RUN button again at the servo machine test system.
15. Set the servo machine test system to a constant torque level of M = 0.1 Nm as shown in Table 7.
16. Vary the excitation current using the preset values in the Table 7.
17. Make sure to measure the power factor cos φ and enter the measured values into the Table 7.
18. Repeat steps 15 to 17 for constant torque levels 0.5 and 1.0 Nm with excitation current preset values of Table 7.
19. Switch off the switch CO3212-1W.
20. Switch off the servo machine test system.

M	Iexc./A	1	2	3	4	
0.1 Nm	cos φ					
M	Iexc./A	1.5	2	2.5	3	3.5
0.5 Nm	cos φ					
M	Iexc./A	2	2.5	3	3.5	4
1.0 Nm	cos φ					

Table 7:
Phase-shifter Operation

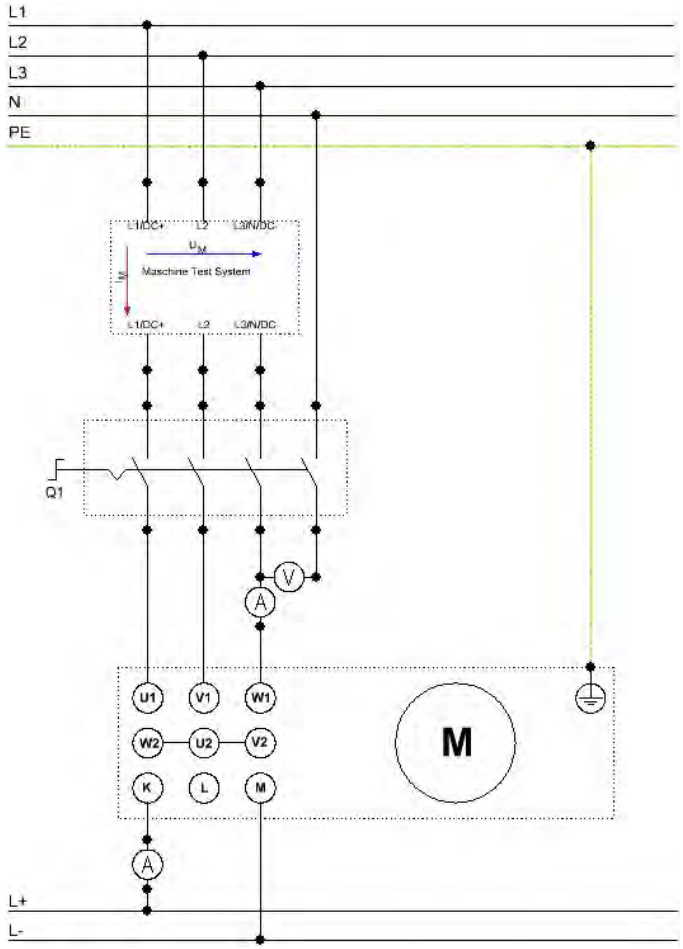

Circuit Diagram

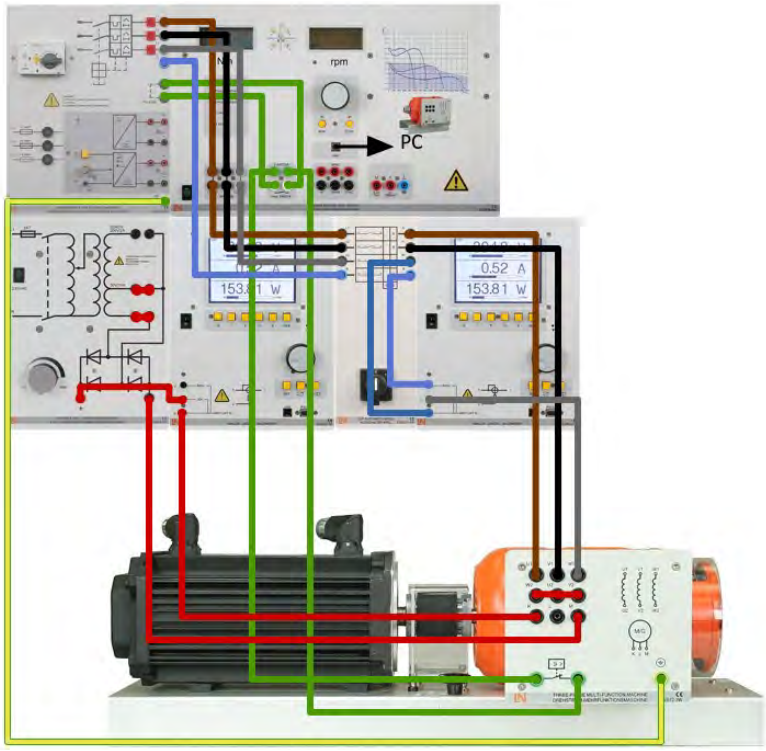

Assembly Diagram

Figure 4:
Synchronous Motor

21. Repeat steps 2 to 7.
22. Press the RUN button again at the servo machine test system.
23. Set the servo machine test system to a constant torque level of M = 0.2 Nm as shown in Table 8.
24. Vary the excitation current using the preset values in the Table 8 from the highest to the lowest.
25. Measure the motor current and enter the measurement results in the Table 8. As soon as the motor falls out of synchronization, it is switched off the grid with switch CO3212-1W and all of the measured values taken after this point in time for the motor current are ignored.
26. Repeat steps 21 to 25 for torque levels of 0.4, 0.6, 0.8, 1.0, and 1.2 Nm with excitation current preset values of Table 8.
27. Switch off the switch CO3212-1W.
28. Switch off the servo machine test system.

M	Iexc./A	4	3.5	3	2.5	2	1.5
0.2 Nm	Imot./A						
0.4 Nm	Imot./A						
0.6 Nm	Imot./A						
0.8 Nm	Imot./A						
1.0 Nm	Imot./A						
1.2 Nm	Imot./A						

Table 8:
V-Characteristics

Synchronous Generator (Three-phase Multifunction Machine)

Procedure:

1. Set up the circuits according to the circuit and assembly diagrams of Figure 5.
2. Switch on the servo machine test system and set the "Speed Control" mode. Operate the machine test system as the drive motor for the synchronous generator in a positive rotation direction.
3. Put the machine test system into operation by pressing RUN and set the synchronous speed of 1800 rpm.
4. Set the exciter current as shown in Table 9.
5. Measure the respective generator voltage "V2" for the exciter currents.

6. Enter the measured values of "V2" and the torque produced by the drive motor in the Table 9.
7. Set the exciter current to 3.0 A.
8. Follow the speed values from the Table 9 and measure the corresponding generator voltage "V2" and the torque produced by the drive motor for each value.
9. Record the values in Table 9.
10. Press the STOP button at the servo machine test system

Iexc./A	0.5	1	1.5	2	2.5	3	3.5	4
"V2"/V								
M/Nm								
	n/rpm	500	750	1000	1250	1500	1800	
Iexc.=3 A	"V2"/V							
	M/Nm							

Table 9:
Synchronous Generator

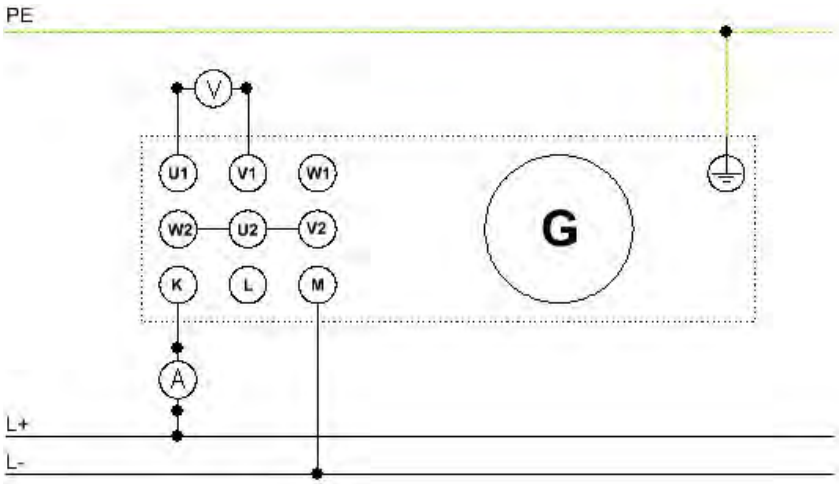

Circuit Diagram

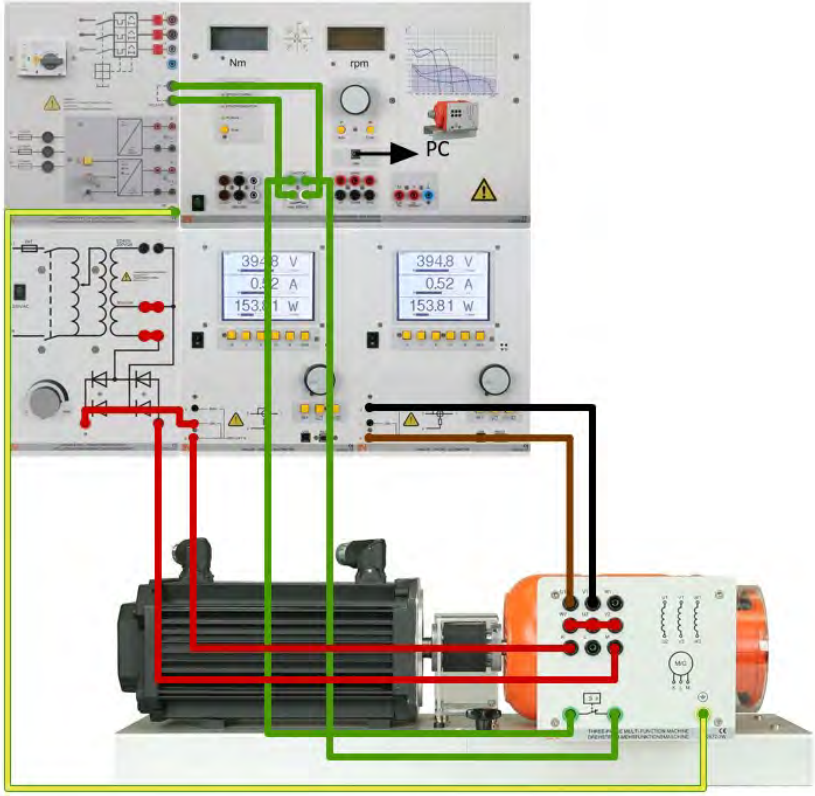

Assembly Diagram

Figure 5: Synchronous Generator

11. Assemble the circuits according to the circuit and assembly diagrams of Figure 6.
12. Switch on the servo machine test system and set the "Speed Control" mode. Operate the machine test system as the drive motor for the synchronous generator in a positive rotation direction.
13. Put the machine test system into operation by pressing RUN and set the synchronous speed of 1800 rpm.
14. Set the exciter current to 3.0 A.
15. Begin with the highest value for the load resistor and each respective value measure and record the variables of Table 10. (Phase values).
16. Press the STOP button at the servo machine test system.
17. Modify the circuit as indicated in Figure 7.
18. Repeat steps 12 to 14,
19. For each value of capacitor load measure and record the variables of Table 11.
20. Press the STOP button at the servo machine test system.
21. Modify the circuit as indicated in Figure 8.
22. Repeat steps 12 to 14,
23. For each value of capacitor load measure and record the variables of Table 12.

24. Press the STOP button at the servo machine test system.

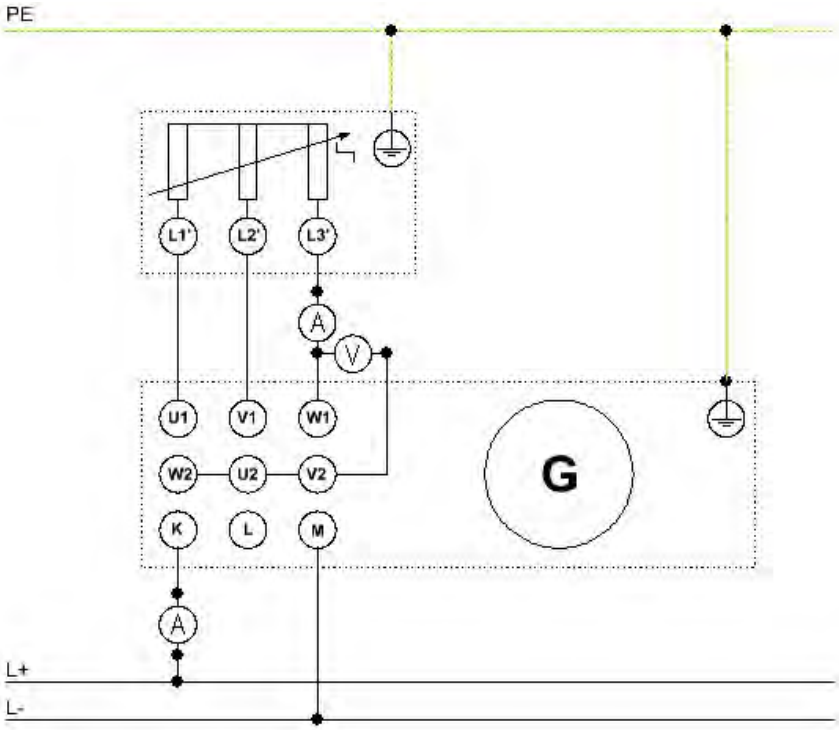

Circuit Diagram

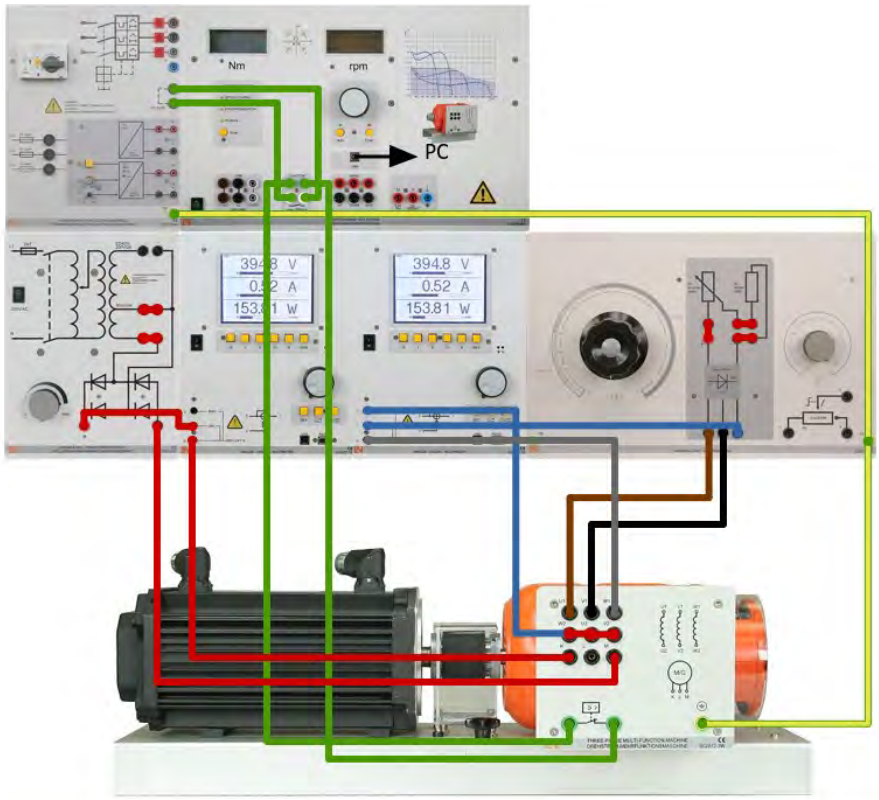

Assembly diagram

Figure 6:

Resistor Load Characteristics

Iexc.=3A			
Ra/Ohm	I/A	V/V	P/W
1000			
500			
300			
200			
100			
50			
30			
20			
10			
5			

Table 10:

Resistor Load Measurements

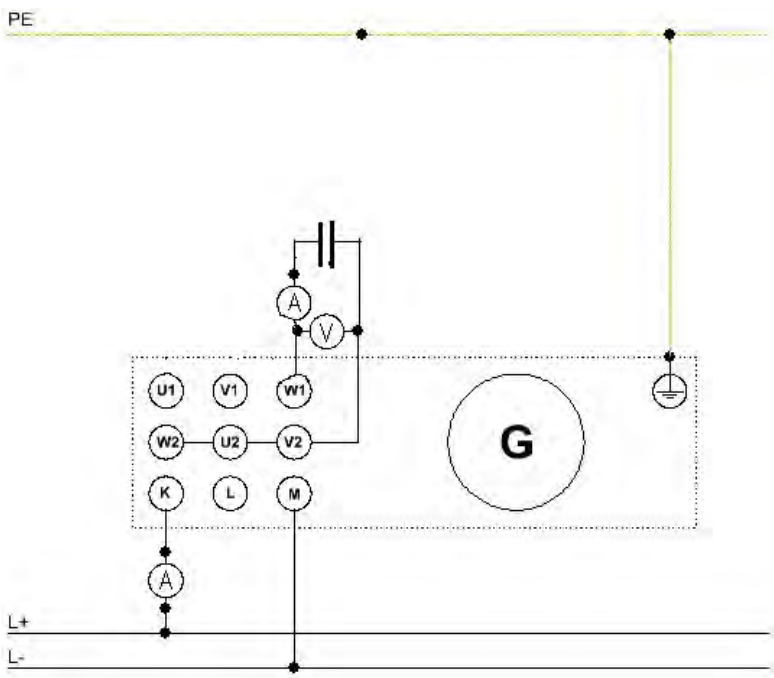

Figure 7:

Capacitor Load Characteristics

Iexc.=3A			
C/µF	I/A	V/V	Q/Var
2			
4			
6			
8			
10			
12			
14			
16			

Table 11:

Capacitor Load Measurements

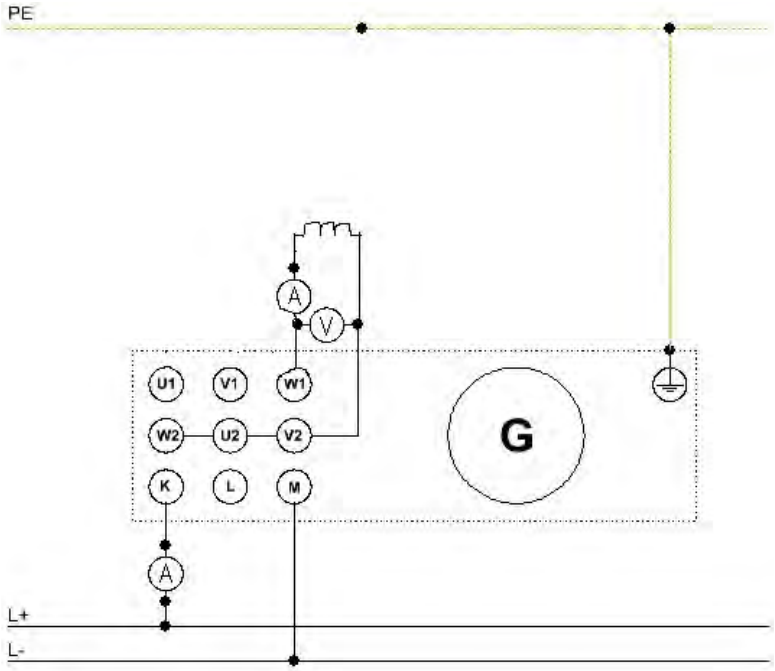

Figure 8:

Inductor Load Characteristics

Iexc.=3A			
L/H	I/A	V/V	Q/Var
3.20			
1.60			
1.07			
0.80			
0.64			
0.53			
0.46			
0.40			

Table 12:

Inductor Load Measurements

Grid Synchronization (Three-phase Multifunction Machine)

Procedure

All synchronization methods require the most extreme care and attention!
The generator may under no circumstances be switched asynchronously on line!

Dark Method

1. Set up the circuits according to the circuit and assembly diagrams of Figure 9.
2. Switch on the servo machine test system and set the "Synchronization & Speed Control" mode. Operate the machine test system as the drive motor for the synchronous generator in a clockwise rotation direction.
3. Put the machine test system into operation by pressing RUN and use the control knob to set the synchronous speed of 1800 rpm (or close to 1800 rpm).
4. Switch the exciter unit CO3212-5Q7 on and adjust its current to a V motor close to 120 V.
5. Turn on the power supply for electrical machines CO3212-5U7 and motor protection switch CO3212-1J7.
6. If the lamps light up alternately then one phase winding on the generator has to be exchanged with other. You should switch off the exciter unit, stop the servo brake, switch off the motor protection switch CO3212-5U7, and do the change of phase windings. Repeat steps 2 to 5 again.
7. Vary the rotation speed using the control knob so that all incandescent lamps light up simultaneously at low rate.
8. At the right moment, i.e. when all of the incandescent lamps are dark, activate the S1 switch consequently connecting the generator on line to the grid.
9. This concludes the synchronization. Observe the generator and meters for any abnormality.
10. Subsequently disconnect the generator again from the grid opening the power switch S1.
11. Switch off the exciter unit and stop the servo brake. Also, turn off the power supply for electrical machines CO3212-5U7 and motor protection switch CO3212-1J7.

Bright Method

1. Modify the circuit connection in accordance with the circuit diagram of Figure 10.
2. Repeat steps 2-7 from the *"Dark Method"* procedure.
3. At the right moment, i.e. when all of the incandescent lamps light up the brightest, activate the S1 switch consequently connecting the generator on line to the grid.
4. This concludes the synchronization. Observe the generator and meters for any abnormality.
5. Subsequently disconnect the generator again from the grid opening the power switch S1.
6. Switch off the exciter unit and stop the servo brake. Also, turn off the power supply for electrical machines CO3212-5U7 and motor protection switch CO3212-1J7.

Three-lamp Method

1. Change the circuit connection in accordance with the circuit diagram of Figure 11.
2. Repeat steps 2-7 from the "Dark Method" procedure.
3. At the right moment, i.e. when the lamp on the left is dark and the other two lamps light up the brightest, activate the S1 switch consequently connecting the generator on line to the grid.
4. This concludes the synchronization. Observe the generator and meters for any abnormality.
5. Subsequently disconnect the generator again from the grid opening the power switch S1.
6. Switch off the exciter unit and stop the servo brake. Also, turn off the power supply for electrical machines CO3212-5U7 and motor protection switch CO3212-1J7.

Double Frequency Meter, Double Voltmeter and Synchroscope Method

1. Change the circuit connection in accordance with the circuit diagram of Figure 12.
2. Switch on the servo machine test system and set the "Synchronization & Speed Control" mode. Operate the machine test system in a clockwise rotation direction. Turn on the power supply for electrical machines CO3212-5U7 and protection switch CO3212-1J7.
3. Put the machine test system into operation by pressing RUN and use the control knob to set the synchronous speed of 1800 rpm (or close to 1800 rpm).
4. Switch the exciter unit CO3212-5Q7 on and adjust its current until the double voltmeter indicate the same measured values for both circuits (grid and generator).
5. If the lamps light up alternately then one phase winding on the generator has to be exchanged with other. You should switch off the exciter unit, stop the servo brake, and do the change of phase windings. Repeat steps 2 to 4 again.
6. Vary the rotation speed using the control knob so that the the synchroscope light up simultaneously at low rate.
7. At the right moment, i.e. when the synchroscope comes to a standstill at the mark shown above, activate the S1 switch consequently connecting the generator on line to the grid.
8. This concludes the synchronization. Observe the generator and meters for any abnormality.
9. By activating the S1 switch of the synchronization unit CO3212-6V2 the servo brake is set to "Torque Control" mode. Increase the drive torque using the control knob in accordance with the value given in the Table 13.
10. Also, vary the exciter current step-by-step as specified in Table 13 below.
11. Measure the generator's electrical power output P, the reactive power Q and the power factor cos φ.
12. Enter the measured values into Table 13 included their sign ($P_{gen} = 3 * P_{phase}$; $Q_{gen} = 3 * Q_{Phase}$).
13. Now, set the exciter unit to a constant excitation current of 3.5 A (see Table 14 below).
14. Vary the drive torque step-by-step using the control knob, in accordance with the values in Table 14.
15. In the process measure the generator's electrical power output P_{phase} (P_{ph}) and $P_{excitation}$ (P_{exc}) and enter the values into Table 14 included their sign.
16. Based on the rotation speed and the torque compute the mechanical power P_{mech} consumed, whereby *M* corresponds to the torque and ω_N corresponds to the nominal angular frequency.
    a. $P_{mech} = M \cdot \omega_N$
    b. $\omega_N = 2 \cdot \pi \cdot n_{syn} / 60$
17. Based on the variables determined compute the efficiency η of the synchronous generator.

18. Please take also into account the power $P_{excitation}$ consumed for the excitation of the rotor.

19. Finally after successfully completing the measurements disconnect the generator from the grid opening the power switch S1.

20. Switch the exciter unit off and stop the servo brake. Also, turn off the power supply for electrical machines CO3212-5U7 and motor protection switch CO3212-1J7.

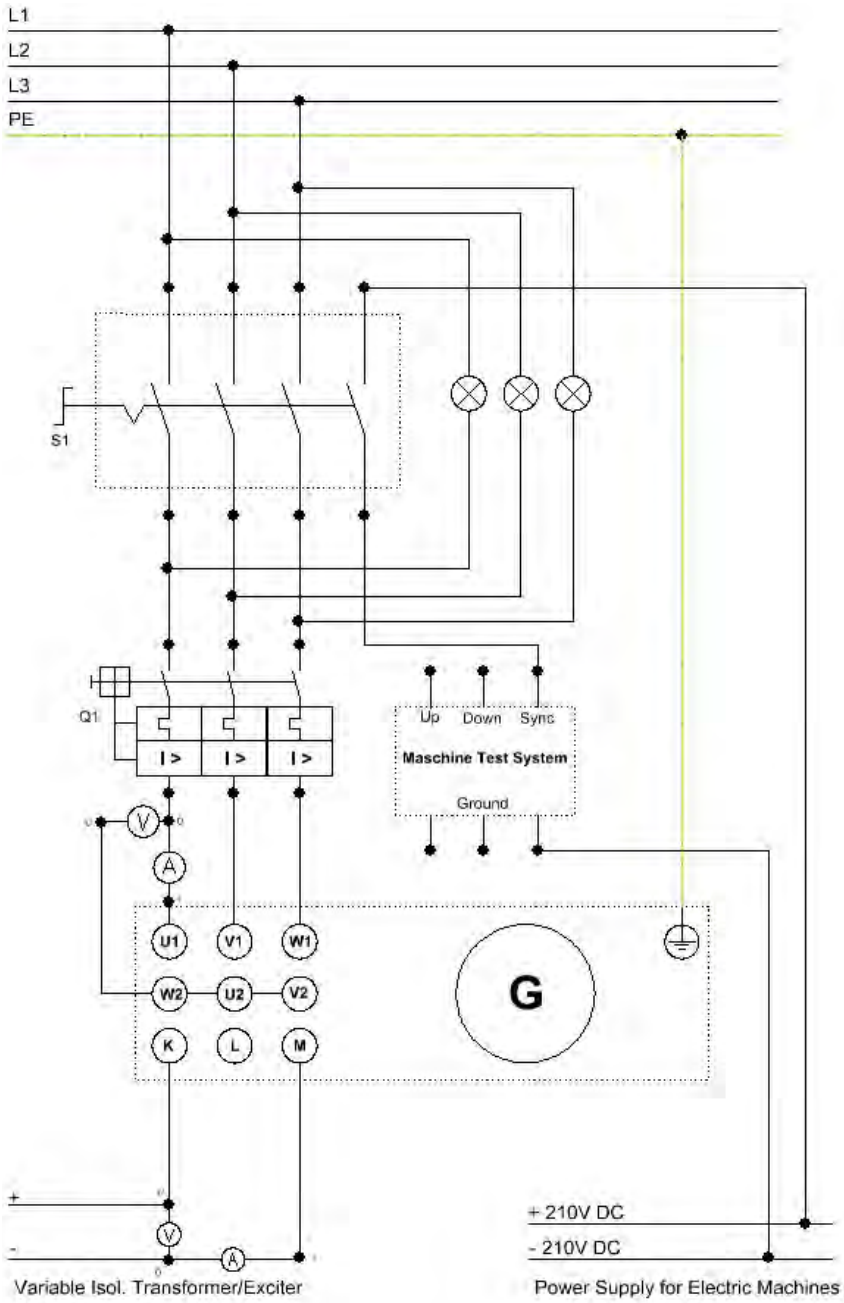

Circuit Diagram

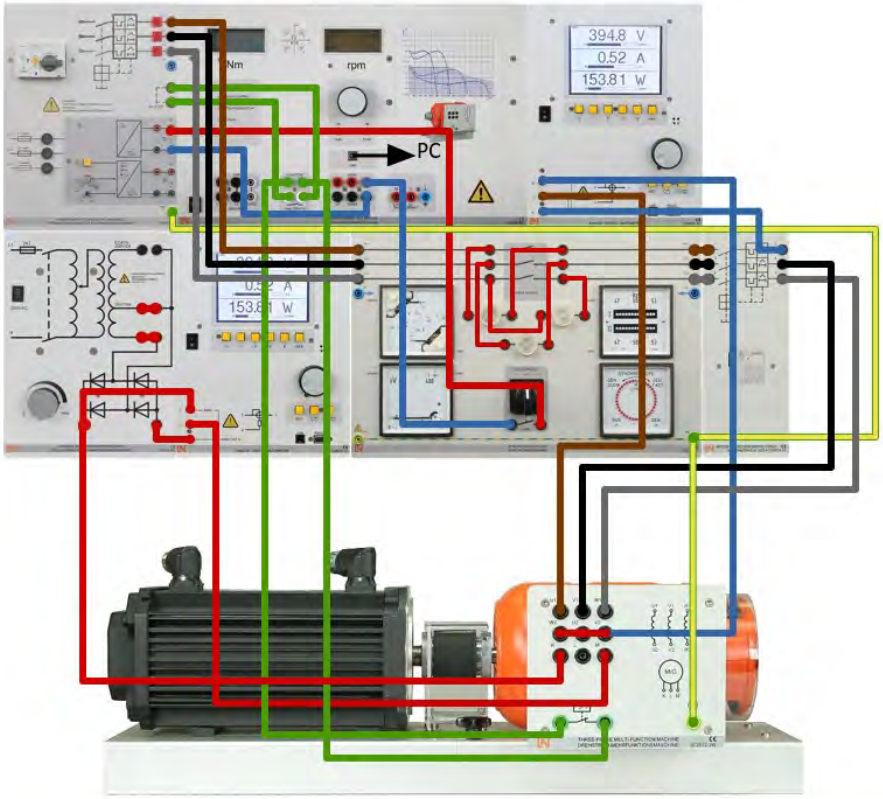

Assembly Diagram

Figure 9:
Dark Method Synchronization

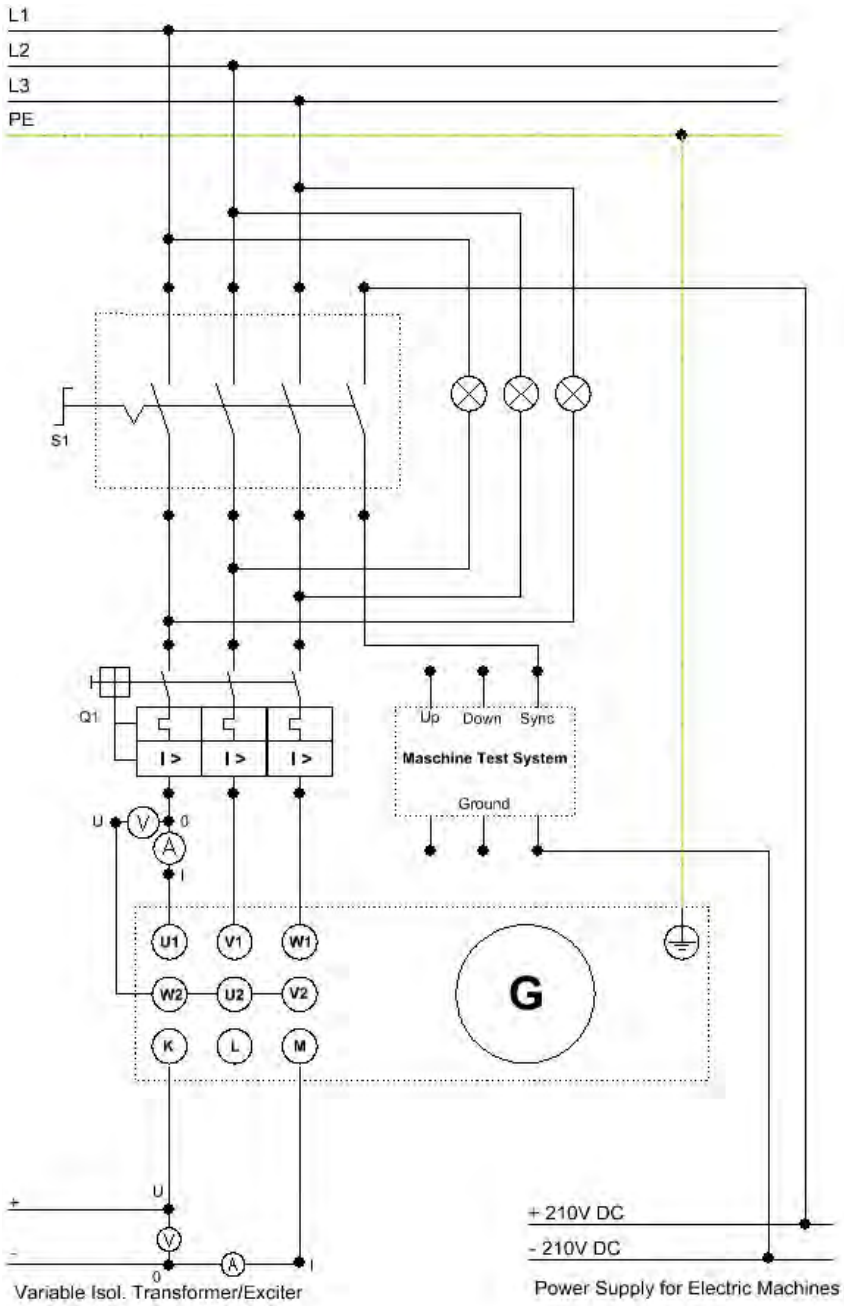

Figure 10:

Bright Circuit Synchronization

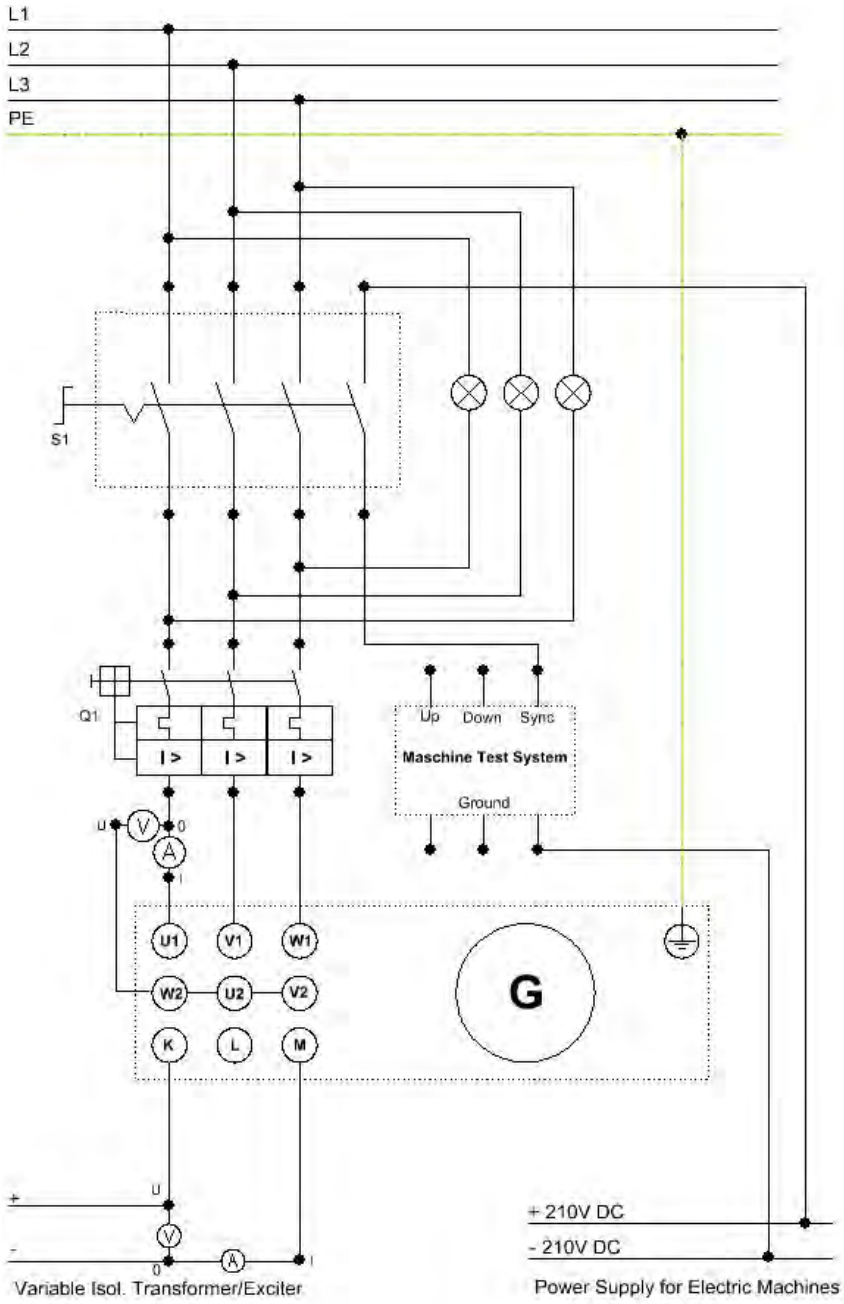

Figure 11:
Three-lamp Circuit Synchronization

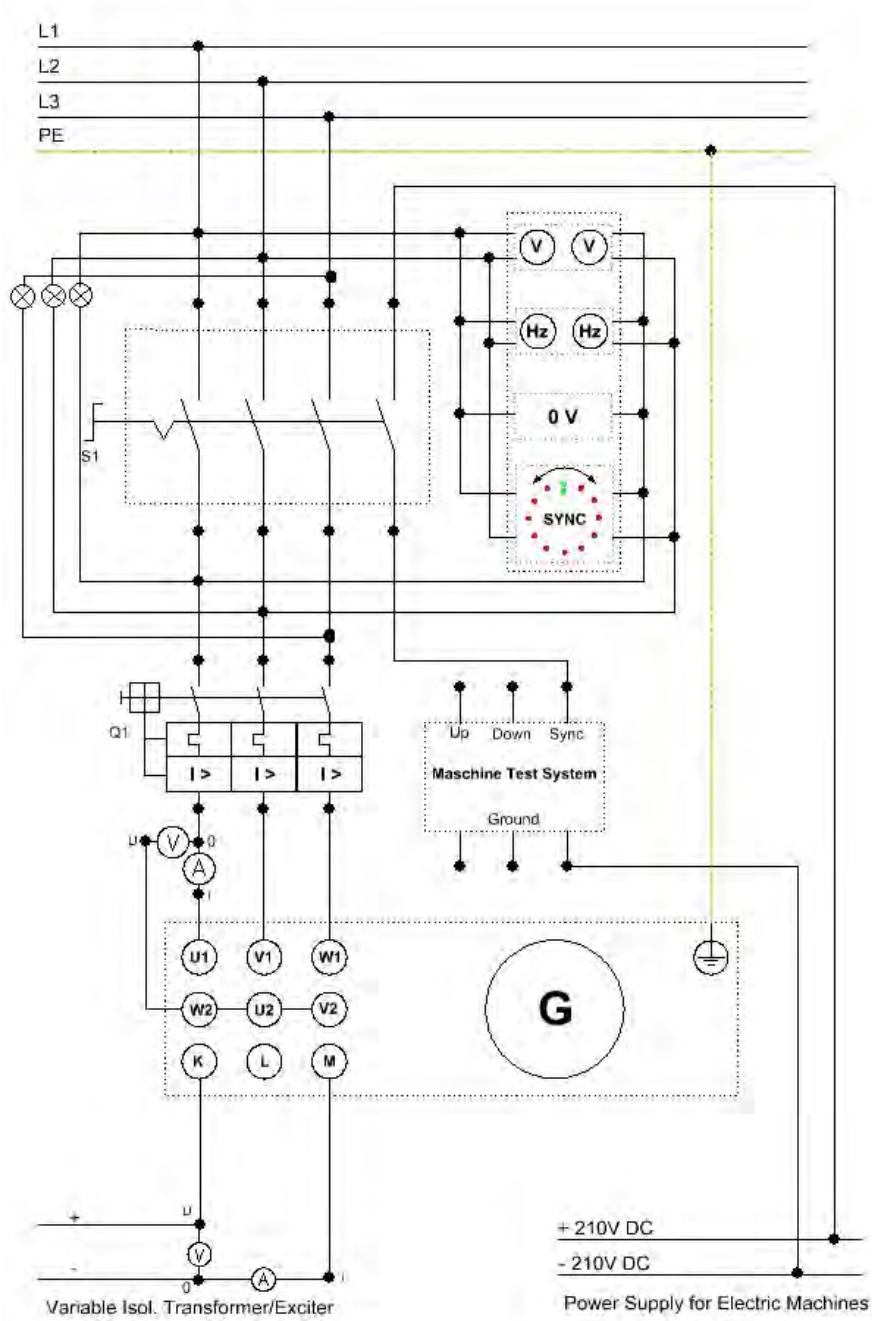

Figure 12:

Double Frequency Meter, Double Voltmeter, Zero Voltage Meter and Synchronoscope Circuit Diagram

M = -0.8 Nm			
Iexc./A	P/W	Q/Var	cos φ
1			
1.5			
2			
2.5			
3			
3.5			

Table 13:

Generation of Capacitive and Inductive Reactive Power

Iexc=3.5 A		$3*P_{gen}=$		$P_{exc}+P_{gen\_tot}=$	$M*\omega_N =$	$(P_{ele}/P_{mech})*100 =$
M/Nm	P_{gen}/W	P_{gen_tot}/W	P_{exc}/W	P_{ele}/W	P_{mech}/W	η/%
-0.4						
-0.6						
-0.8						
-1						
-1.2						

Table 14:
Generator Power at Variable Drive Power

Report Questions

1. What causes the rotor standstill voltage?
2. What is the correct method to reverse rotation direction?
3. Plot the no-load characteristics (Table 2) M = f(n) and I = f(n) in same graph. Explain results.
4. Plot constant load operation (Table 3) Ra = f(n) and I = f(n) in same graph. Explain results.
5. Plot graph of step 34 of asynchronous motor and explain results in terms of the four load characteristics recorded.
6. Plot graph of step 47 of asynchronous motor. How would you describe the characteristic curve of the load torque of the load machine pump/ventilator?
7. Plot the load characteristics at varying excitation (Table 6) I = f(M) and n = f (M) in same graph. Explain results. At which break-down torque values for the appropriate exciter currents the motor loses synchonization?
8. Plot the phase-shifter operation (Table 7) cos φ = f(I_{exc}). Which type of excitation leads to the generation of inductive or capacitive reactive power?
9. List the relationships between grid load and excitation type if you want to use the synchronous motor as a reactive power compensator in the transmission system.
10. Plot synchronous motor V-characteristics (Table 8) I_{mot} = f(I_{exc}). At which excitation level does the motor generate capacitive reactive power? How does the synchronous motor respond when the exciter current is lowered to below the stability limit?
11. Plot synchronous generator characteristics (Table 9) V2 = f(I_{exc}) and V2 = f(n) separated. At which exciter current does the synchronous generator achieve nominal voltage? How does the drive motor's torque respond and why does it respond in this way?
12. Plot synchronous generator resistor load characteristics (Table 10) V = f(I) and P = f(I) in same graph. Explain results.

13. Plot synchronous generator capacitor load characteristics (Table 11) V = f(I) and Q = f(I) in same graph. Explain results.

14. Plot synchronous generator inductor load characteristics (Table 12) V = f(I) and Q = f(I) in same graph. Explain results.

15. Explain the bright, dark and three-lamp synchronization methods.

16. What do you need to watch out for with the bright circuit?

17. When should two external conductors of the synchronous generator be exchanged?

18. What happens if the generator is connected asynchronously on line to the mains?

19. Plot synchronous generator's generation of capacitive and inductive reactive power (Table 13) $\cos \varphi = f(I_{exc})$, $P = f(I_{exc})$, and $Q = f(I_{exc})$ in same graph. Explain the excitation of the synchronous generator in terms of the values measured in Table 13.

20. Plot synchronous generator's power at variable drive power (Table 14) $P_{\_elec} = f(M)$, $P_{\_mech} = f(M)$, and $\eta/\% = f(M)$ in same graph. Explain results.

21. How does the speed of the generator respond when the drive power is increased at variable drive power (Table 14)?

References

M.Germeroth, *Three-phase Multifunction Machines*, Lucas-Nülle GmbH, 2017